FAN SCHEDULE

Unit Tag	Area Served	CFM	ESP (IN.)	Fan RPM	Sones	Drive	BHP	HP (Watts)	Volts	Phase	Type	Model	Detail	Remarks
EF-1	TOILET EXHAUST	630	.7	1140	9.5	DIRECT	.29	1/3	115	1	CENT. INLINE	SQ-140-B	4/M2.1	1-4
TF-1	I.T. RM. 115 VENTILATION	475	.25	1070	2.1	DIRECT	-	217W	115	1	CEILING MOUNTED	CSP-A510	5/M2.1	1, 2, 3, 5

1. MODEL NUMBERS BASED ON GREENHECK. EQUALS BY CARNES, COOK.
2. DISCONNECT BY MFG.
3. BACKDRAFT DAMPER.
4. UNIT MOUNTED SOLID STATE SPEED CONTROL.
5. WALL MOUNTED T'STAT.

GRILLE & DIFFUSER SCHEDULE

SYM	TYPE	USE	CFM RANGE	NECK SIZE	OVER-ALL SIZE	DMPR	FINISH	FRAME	PRICE MODEL NO	REMARKS
A--	LOUVER FACE	SUPPLY 4-WAY	SEE PLANS & RMK 5	RMK 5	RMK 4	OBD	OFF WHITE	RMK 3	SMD	1-6
BT-	PERF.	RETURN/ EXHAUST	SEE PLANS & RMK 6	RMK 7	RMK 4	RMK 9	OFF WHITE	RMK 3	PDDR	1-4, 7-10
BS-	PERF.	RETURN/ EXHAUST	SEE PLANS & RMK 6	RMK 7	RMK 4	RMK 9	OFF WHITE	RMK 3	PDDR	1-4, 7-10
C-	SIDEWALL	SUPPLY	SEE PLANS	SEE PLANS	RMK 4	OBD	RMK 12	SEE PLANS	520D	1-4, 11-13
D-	SIDEWALL	RETURN/ EXHAUST	SEE PLANS	SEE PLANS	RMK 4	RMK 9	RMK 12	SEE PLANS	530	1-4, 9, 12, 13

REMARKS
1. EQUALS: METALAIRE, TITUS, KRUEGER, TUTTLE & BAILEY, NAIL-OR, CARNES. SCHEDULE IS GENERAL, SOME MAY NOT BE USED. PAINT ALL INSIDE VISIBLE SURFACES FLAT BLACK.
2. SYMBOL EXPLANATION:
XXX/CFM = SYMBOL, FRAME (RMK 3), NECK (RMK 5,7)/CFM
3. FRAME TYPES:
S = FLUSH SURF. MTD.. PLASTER FRAME FOR CEILING MOUNTING.
T = T-BAR
E = DUCT MOUNTED: V-BEVELED DROP SURF. (TYPE "A" DIFFUSER)
D = DROPPED FRAME
NOTE: VERIFY FRAME/CEILING COMPATIBILITY.
4. OVERALL SIZE: LAY-IN = 2'x2', OTHER GRILLES = NECK + 2"+/-.
5. LOUVER FACE SUPPLY NECK SIZES

NO.	ROUND NK SIZE	CFM	NO.	SQUARE NK SIZE	CFM
A	6"	100	H	6x6	125
B	8"	175	I	9x9	280
C	10"	275	J	12x12	500
D	12"	400	K	15x15	780
E	14"	535	L	18x18	1125
F	16"	700	M	21x21	1530
G	18"	885	N	24x24	2000

NOTE: VERIFY CFM / NECK SIZE.
6. ADJUSTABLE: HORIZONTAL/VERTICAL - "PIANO HINGE" DEVICE.
7. "B" & "E" EXH/RETURN NECK SIZES ("E" = SQ. NK. ONLY)

NO.	ROUND NK SIZE	CFM	NO.	SQUARE NK SIZE	CFM
A	6"	100	G	8x8	220
B	8"	175	H	10x10	345
C	10"	275	I	12x12	500
D	12"	400	J	14x14	680
E	14"	535	K	16x16	885
F	16"	700	L	18x18	1125
NOTE: VERIFY			M	22x22	1680
CFM / NECK SIZE.			N	22x46	2600

8. NO NECK SIZE INDICATES NON-DUCTED, LAY-IN PANEL.
9. OBD IF USED AS EXHAUST.
10. ALL ALUM. CONSTRUCTION (INCLUDING BACKPAN) IF SHOWN ON PLANS.
11. VOLUME EXTRACTOR WHERE SHOWN ON PLANS.
12. PAINT TO MATCH WALL.
13. VERTICAL FRONT BLADES.

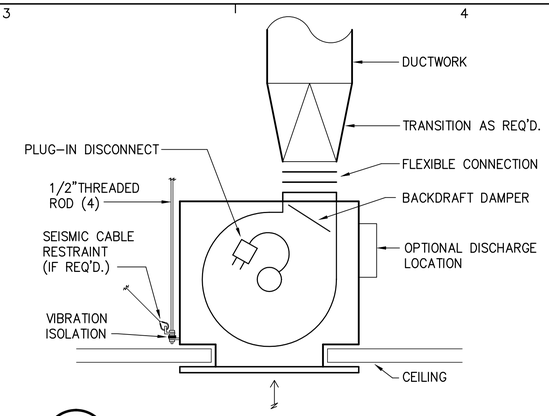

5 / M2.1 CEILING EXHAUST FAN DETAIL
NTS

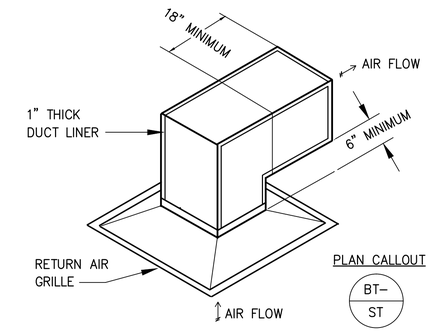

6 / M2.1 SOUND TRAP DETAIL
NTS

SPECIFICATIONS

(1) Ductwork

(a) Ductwork shall be constructed of zinc coated sheet steel and shall conform to the 1st Edition of SMACNA HVAC Duct Construction Standards -Metal and Flexible, 1985 as follows:

Rectangular Duct: 1" w.g. pressure class - Table 1-4.

Round Duct: 2" w.g. pressure class - Table 3-2.

(b) All ductwork must be sealed in accordance with Seal Class C as defined in SMACNA HVAC Duct Construction Standards-Metal and Flexible, 1985.

(c) Duct hangers and supports shall conform to those shown in Tables 4-1 and 4-2 of SMACNA HVAC Ductwork 1985, 1st Edition.

(2) Duct Insulation

(a) Insulation shall be Owens-Corning, Certain-Teed/St. Gobain, Manville or approved equivalent. Adhesives shall be as manufactured by 3-M Foster or Insulation Manufacturer. Insulation shall have composite (insulation, jacket and adhesive) fire and smoke hazard rating as tested by ASTM E-84, not exceeding Flame Spread -25 and Smoke Developed -50.

(b) All vapor barriers and joints shall be sealed to prevent condensation. Clean and dry all ductwork before installing insulation. All weld joints shall be wire brushed and give one (1) coat of red lead before insulating. Staples will not be permitted in insulation.

(c) All supply ducts unless noted otherwise on plans shall be insulated by wrapping with 2" thick, minimum installed "R" value = 6.6, fiberglass with vapor barrier jacket with joints overlapped a minimum of two inches. Insulation shall be adhered to duct with non-combustible insulation bonding adhesive applied in 4" strips, 8" on center. All joints shall be secured with flare door staples on 3" centers through all laps over duct tape.

(d) Lined Duct

Ductwork as indicated on plans shall be lined with Owens-Corning Aeroflex Vapor-Seal Duct Insulation, l-l/2 pcf, l" thick, or equal by Certain-Teed/St. Gobain or Johns Mansville.

Duct liner and adhesive shall meet requirements of NFPA 90A and shall have UL fire hazard classification not to exceed the following: flame spread -25; fuel contributed -50; smoke generated -50. There will be no erosion of duct liner material at velocities up to 4000 fpm. Duct liner shall be applied to the sheet metal with 100% coverage of adhesive. The duct liner shall be cut to assure corner joints with no gaps. On horizontal runs, tops of ducts over 12" in width and sides of 16" in height shall be additionally secured with mechanical fasteners. On spans less than 30" fasteners are to be placed at midpoints. On vertical runs, fasteners shall be placed on a maximum of 15" centers on all width dimensions over 12". Fasteners shall be flush with the liner surface. All exposed edges and leading edges of all transverse and longitudinal joints of the liner shall be coated with a fire resistant adhesive. The exposed mechanical fasteners shall be coated with a fire resistant adhesive. The upstream end must be continuously adhered to for a 6" width.

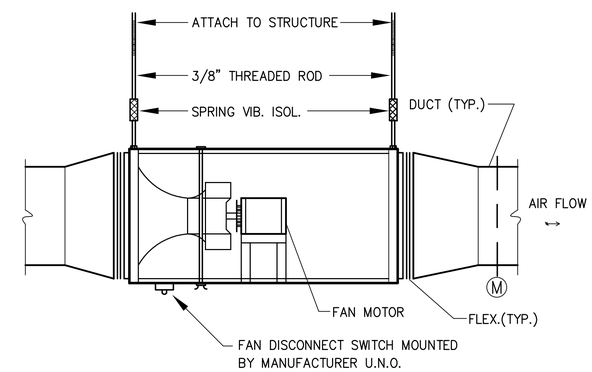

4 / M2.1 INLINE FAN DETAIL
NTS

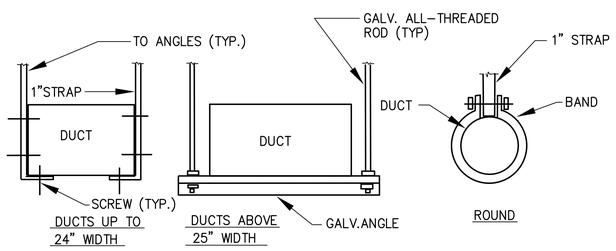

1 / M2.1 DUCTWORK HANGER DETAILS
NTS

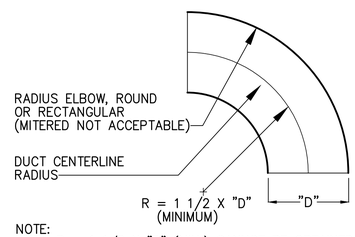

NOTE:
WHEN R = 1 1/2 X "D" (MIN.) CANNOT BE OBTAINED, CONSTRUCT ELBOW ACCORDING TO APPROPRIATE DETAIL.

2 / M2.1 RADIUS ELBOW DETAIL
NTS

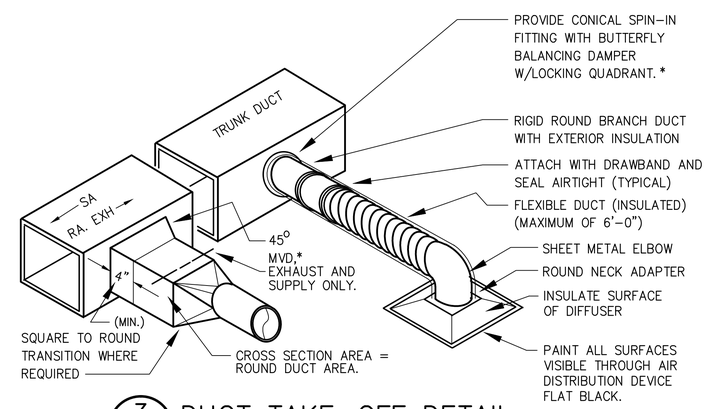

3 / M2.1 DUCT TAKE-OFF DETAIL
NTS *NOTE: DAMPERS TO BE LEFT OUT IN MEDIUM PRESSURE DUCTWORK

CONSULTANTS
McKNIGHT·SMITH WARD · GRIFFIN
ENGINEERS, INCORPORATED
PO Box 240828 • 4223 South Boulevard
Charlotte, NC
704/527-2112

NORTH CAROLINA PROFESSIONAL ENGINEER SEAL 17250 V. CRAIG MCKNIGHT 7-9-13

REONVATIONS TO RUTHERFORD COUNTY COURT HOUSE TAX OFFICES
Rutherfordton, North Carolina

AIA
THE Patterson Design GROUP
108 W WARREN ST • SUITE 311 - SHELBY, NORTH CAROLINA • (704) 487-1120 • (704) 487-1139 (F)

REVISIONS

MARK	DATE

SHEET TITLE
SCHEDULES DETAILS SPECS

PROJECT NO: 3089
ISSUE DATE: 7-9-13
SHEET M2.1 OF 3