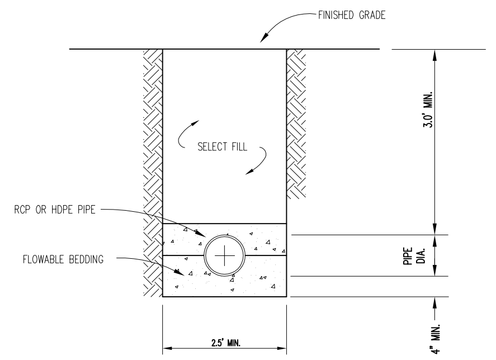

PIPE TRENCH PROFILE

USE FOR SCH 40 PVC FOR DRAIN PIPE AND CLASS 51 DUCTILE IRON FOR WATER PIPE

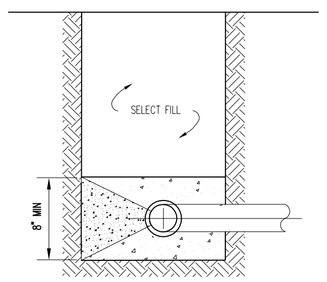

THRUST BLOCK PROFILE

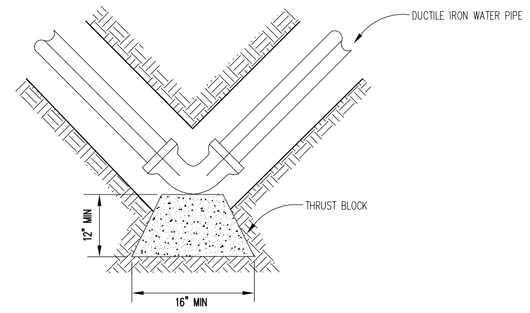

THRUST BLOCK PLAN

NOTE:
1. COMPACT SELECT FILL BACKFILL TO 95% MDD (ASTM D-698)
2. SELECT FILL CONSISTS OR CABC STONE AND/OR CONCRETE PAVEMENT (UPPER 10")
3. FLOWABLE BEDDING MAY CONSIST OF CEMENT-BENTONITE SLURRY OR CONCRETE
4. PIPE TO BE PREASSEMBLED AND SET TO SPRINGLINE IN CONCRETE WHILE WET
5. ALLOWABLE FLOWABLE BEDDING TO CURE 24 HOURS BEFORE BACKFILLING THE TRENCH

PIPE TRENCH
DETAIL 1/C4
N.T.S.

FOR REVIEW AND BIDDING
NOT FOR CONSTRUCTION

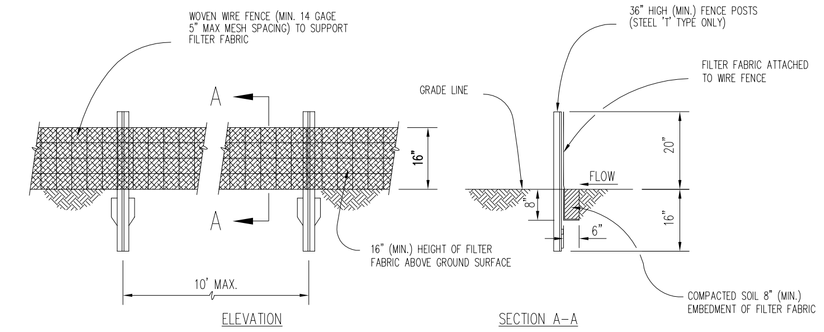

SILT FENCE
DETAIL 2/C4
N.T.S.

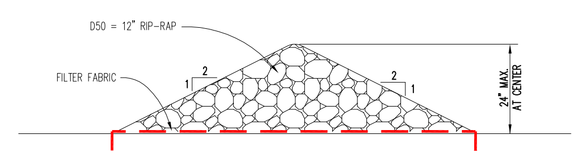

SECTION A-A

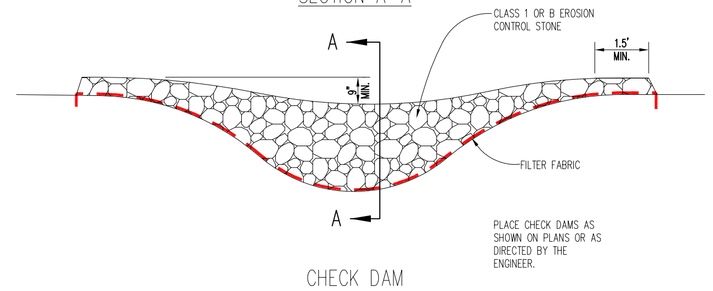

CHECK DAM
DETAIL 5/C4
N.T.S.

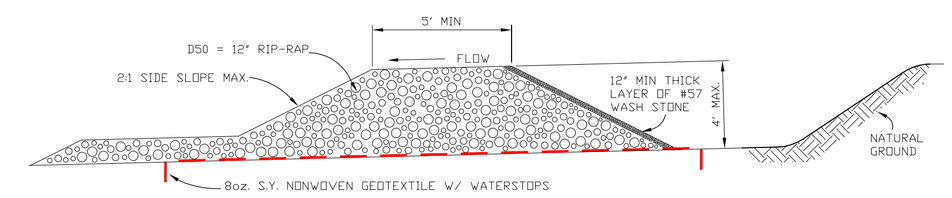

CROSS SECTION

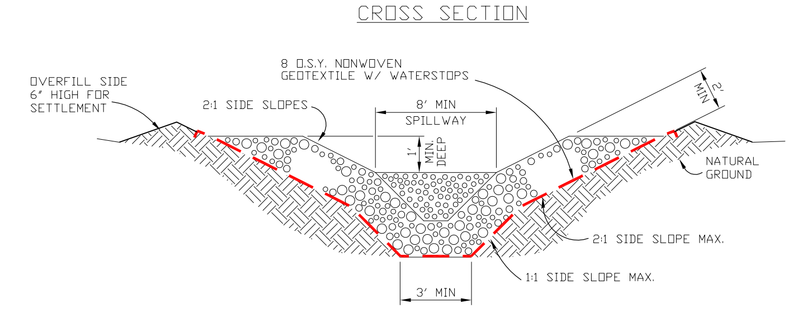

SEDIMENT TRAP ROCK DAM
DETAIL 4/C4
N.T.S.

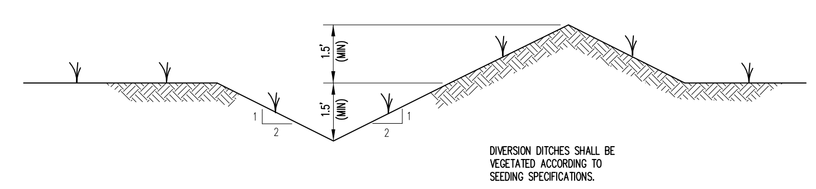

DIVERSION DITCH
DETAIL 6/C4
N.T.S.

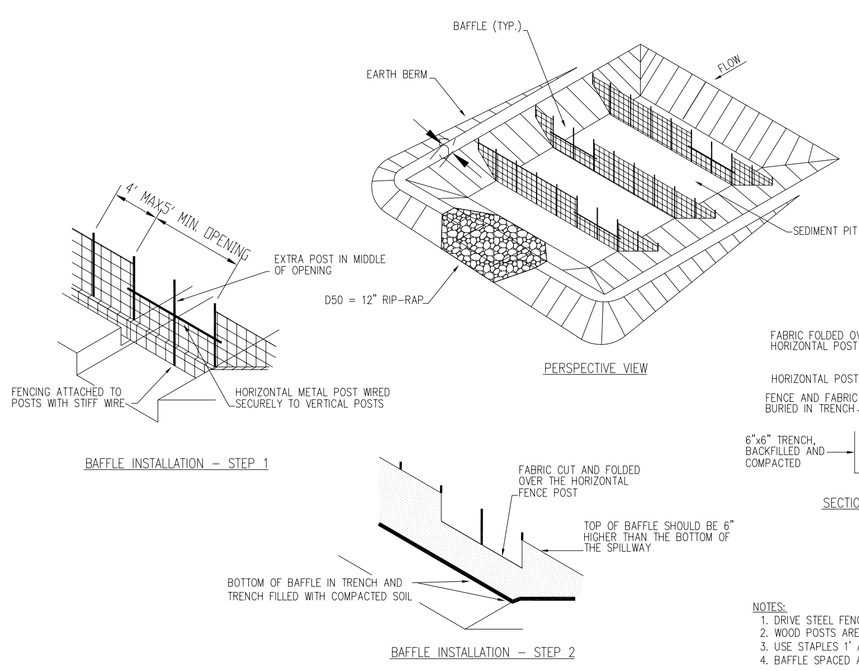

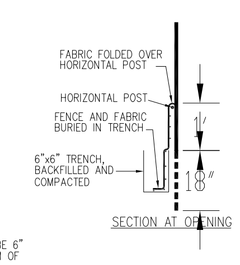

NOTES:
1. EARTH BERM SHALL BE STABILIZED W/ VEGETATION ACCORDING TO SEEDING SPECIFICATIONS.
2. USE CLEAN COMPACTED FILL MATERIAL FOR EARTH BERM.

NOTES:
1. DRIVE STEEL FENCE POST AT LEAST 18" INTO SOLID GROUND
2. WOOD POSTS ARE NOT ACCEPTABLE
3. USE STAPLES 1' APART TO ATTACH FABRIC TO "HOG WIRE"
4. BAFFLE SPACED AS PER APPROVED PLAN.

SEDIMENT BASIN BAFFLES
DETAIL 3/C4
N.T.S.

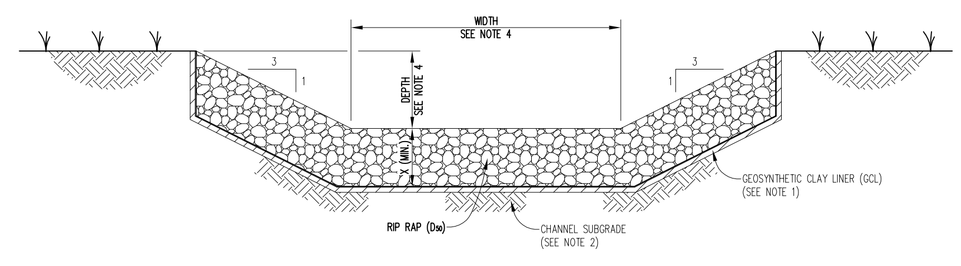

RIP-RAP CHANNEL
DETAIL 8/C4
N.T.S.

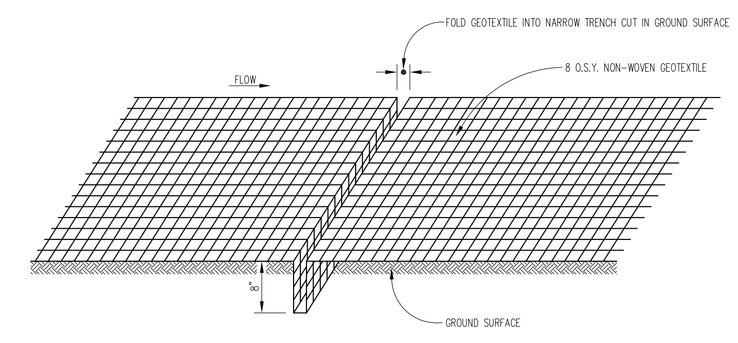

WATER STOP DETAIL
DETAIL 7/C4
N.T.S.

DATE	NO.	REVISION
8-17-12	1	ADDED DETAILS 5 AND 6

David Garrett & Associates
Engineering and Geology
5105 Harbour Towne Drive, Raleigh, North Carolina 27604
Email: david_garrett_eg@mindspring.com 919-231-1818 (Office and Fax) 919-418-4375 (mobile)

SEAL: NORTH CAROLINA PROFESSIONAL ENGINEER SEAL 019 GARRETT 8-17-2012

SEAL: NORTH CAROLINA PROFESSIONAL ENGINEER SEAL 019 GARRETT 8-17-2012

PROJECT TITLE: RUTHERFORD COUNTY, N.C, CDNTRAL MSW FACILITY TRANSFER STATION UPGRADE PERMIT #81-04T

DRAWING TITLE: SITE WORK DETAILS

DESIGNED BY: G.D.G.	DRAWN BY: A.W.H.
CHECKED BY: G.D.G.	PROJECT NO.: RUTH-2
SCALE: AS SHOWN	DATE: JUN 2012
FILE NAME: RUTH-D0116_Transfer Station	
SHEET NO. 10	DRAWING NO. C4