GENERAL

1. THE GENERAL NOTES ARE NOT A SUBSTITUTE OR A REPLACEMENT FOR THE PROJECT SPECIFICATIONS. THESE NOTES ARE INTENDED AS A GUIDE TO THE DESIGN AND/OR CONSTRUCTION REQUIREMENTS ESTABLISHED FOR THIS PROJECT. NO CONTRACTOR SHOULD ATTEMPT TO DESIGN, BID OR CONSTRUCT ANY PORTION OF THE WORK HEREIN WITHOUT CONSULTING THE PROJECT SPECIFICATIONS. IF ANY CONFLICTS OCCUR BETWEEN THE NOTES, PROJECT SPECIFICATIONS AND DETAILS, THE MOST STRINGENT REQUIREMENT SHALL GOVERN UNLESS APPROVED BY THE STRUCTURAL ENGINEER.
2. THE CONTRACT STRUCTURAL DRAWINGS AND SPECIFICATIONS REPRESENT THE FINISHED STRUCTURE, AND DO NOT INDICATE THE METHOD OR MEANS OF CONSTRUCTION. THE CONTRACTOR SHALL SUPERVISE AND DIRECT THE WORK AND SHALL BE SOLELY RESPONSIBLE FOR ALL CONSTRUCTION MEANS, METHODS, PROCEDURES, TECHNIQUES, SEQUENCE AND SAFETY. THE GENERAL CONTRACTOR SHALL BE RESPONSIBLE FOR PROVIDING ALL REQUIRED TEMPORARY BRACING AND SHORING DURING CONSTRUCTION TO MAINTAIN THE STABILITY OF THE STRUCTURE. CONSTRUCTION LOADS SHALL NOT EXCEED THE CAPACITY OF THE INSTALLED STRUCTURE AT ANY TIME.
3. THE ENGINEER DOES NOT HAVE CONTROL OR CHARGE OF, AND SHALL NOT BE RESPONSIBLE FOR CONSTRUCTION MEANS, METHODS, TECHNIQUES, SEQUENCES OR PROCEDURES, FOR SAFETY PRECAUTIONS AND PROGRAMS IN CONNECTION WITH THE WORK, FOR THE ACTS OR OMISSION OF THE CONTRACTOR, SUBCONTRACTOR, OR ANY OTHER PERSONS PERFORMING ANY OF THE WORK, OR THE FAILURE OF ANY OF THEM TO CARRY OUT THE WORK IN ACCORDANCE WITH THE CONTRACT DOCUMENTS.
4. STRUCTURAL DRAWINGS ARE TO BE USED IN CONJUNCTION WITH ARCHITECTURAL, AND OTHER CONTRACT DRAWINGS. THE CONTRACTOR SHALL BE RESPONSIBLE FOR COORDINATING THESE DRAWINGS. DISCREPENCIES, INCLUDING DIMENSIONS, SHALL BE BROUGHT TO THE ATTENTION OF THE ARCHITECT OR DESIGN ENGINEER PRIOR TO PROCEEDING WITH FABRICATION OR CONSTRUCTION.
5. ALL THINGS WHICH, IN THE OPINION OF THE CONTRACTOR, APPEAR TO BE DEFICIENCIES, OMISSIONS, CONTRADICTIONS OR AMBIGUITIES IN THE DESIGN DRAWINGS SHALL BE BROUGHT TO THE ATTENTION OF THE DESIGN ENGINEER PRIOR TO FABRICATION OR CONSTRUCTION.
6. DETAILS/SECTIONS SHOWN ON DRAWINGS ARE TYPICAL AND MAY APPLY TO LOCATIONS OTHER THAN WHERE SPECIFICALLY MARKED ON THE PLANS. IF SECTIONS OR DETAILS DO NOT REPRESENT ALL REQUIRED CONDITIONS, THE ENGINEER SHALL BE CONTACTED FOR CLARIFICATION BY THE GENERAL CONTRACTOR.
7. IF EXISTING CONDITIONS MAKE IT NECESSARY TO REVISE STRUCTURAL DETAILS, NOTIFY DESIGN ENGINEER BEFORE PROCEEDING WITH ANY CHANGES.
8. THE GENERAL CONTRACTOR SHALL BE RESPONSIBLE FOR OBTAINING ALL CONTRACT DRAWINGS AND LATEST ADDENDA AND SUBMITTING THESE DOCUMENTS TO SUBCONTRACTORS AND MATERIAL SUPPLIERS PRIOR TO THE SUBMITTAL OF SHOP DRAWINGS, FABRICATION OF ANY STRUCTURAL MEMBER AND ERECTION IN THE FIELD.
9. THE GENERAL CONTRACTOR SHALL PROTECT EXISTING STRUCTURES AND UTILITIES FROM ALL DAMAGE.
10. EQUIPMENT PADS ARE TO BE PROVIDED BY THE MECHANICAL OR ELECTRICAL CONTRACTORS REQUIRING THE PADS.
11. ALL WORK SHALL BE DONE IN ACCORDANCE WITH OSHA AND OWNER'S REGULATIONS
12. ALL EXISTING CONDITIONS SHALL BE FIELD VERIFIED BY CONTRACTOR AT BEGININNG OF PROJECT. ENGINEER SHALL BE NOTIFIED OF ANY DISCREPANCIES BETWEEN DESIGN DRAWINGS AND FIELD CONDITIONS. NO MATERIALS SHALL BE ORDERED OR FABRICATED PRIOR TO VERIFYING ALL STRUCTURAL DETAILS AND PLANS MATCH FIELD CONDITIONS.

FOUNDATION

1. ALL FOUNDATION AND SLAB ON GRADE EXCAVATIONS ARE TO FOLLOW RECOMMENDATIONS STATED IN THE REPORT OF GEOTECHNICAL EXPLORATION TO BE PROVIDED BY OWNER.
2. ALL EXISTING TOPSOIL, VEGETATION, DISTURBED SOILS AND SURFACE SOILS CONTAINING ORGANIC MATTER OR OTHER DELETERIOUS MATERIALS SHOULD BE STRIPPED FROM WITHIN THE PROPOSED BUILDING AND PAVED AREAS.
3. CONTRACTOR SHALL REMOVE AND REPLACE UNNACCEPTABLE SOILS IN ACCORDANCE WITH THE GEOTECHNICAL REPORT AND/OR AT THE DIRECTION OF THE GEOTECHNICAL ENGINEER.
4. FOUNDATIONS AND SLABS ARE TO BE PLACED ON FIRM UNDISTURBED NATURAL SOIL OR PROPERLY COMPACTED FILL MATERIAL. FILL MATERIAL SHALL BE COMPACTED IN THIN LIFTS TO AT LEAST 95 PERCENT OF THE STANDARD PROCTOR MAXIMUM DRY DENSITY (ASTM D 698). IN ADDITION, AT LEAST THE UPPER 18 INCHES OF SUBGRADE FILL BENEATH PAVEMENTS AND FLOOR SLABS SHOULD BE COMPACTED TO 100 PERCENT OF THE SAME SPECIFICATION.
5. IN ORDER TO VERIFY THAT THE SOILS ENCOUNTERED IN FOOTING EXCAVATIONS ARE SIMILAR TO THOSE ENCOUNTERED IN THE SOIL TEST BORINGS, FOOTING EXCAVATIONS ARE TO BE EXAMINED AND CHECKED WITH A DYNAMIC HAND PENETROMETER BY AN EXPERIENCED ENGINEERING TECHNICIAN WORKING UNDER THE DIRECT SUPERVISION OF THE GEOTECHNICAL ENGINEER.
6. FOOTINGS SHOULD BE POURED AS SOON AS POSSIBLE AFTER EXCAVATION. THE FOUNDATION BEARING AREA SHOULD BE LEVEL AND BE FREE OF LOOSE SOIL, PONDED WATER, AND DEBRIS. FOUNDATION CONCRETE SHOULD NOT BE PLACED ON SOILS THAT HAVE BEEN DISTURBED BY SEEPAGE. IF BEARING SOILS ARE SOFTENED BY SURFACE WATER INTRUSION OR EXPOSURE, THE SOFTENED SOILS MUST BE REMOVED FROM THE FOUNDATION EXCAVATION BOTTOM IMMEDIATELY PRIOR TO PLACEMENT OF CONCRETE.
7. WHERE FOOTING EXCAVATIONS MUST REMAIN OPEN FOR AN EXTENDED PERIOD OR IF RAINFALL BECOMES IMMINENT WHILE BEARING SOILS ARE EXPOSED, A 2" TO 4" THICK MUD MAT OF UNREINFORCED LEAN (F'c=2000psi) CONCRETE SHALL BE PLACED ON THE BEARING SOILS BEFORE PLACEMENT OF THE FOOTING REINFORCING.
8. CENTER ALL FOOTINGS UNDER WALLS, COLUMNS OR GRID LINES UNLESS NOTED OTHERWISE.
9. RETAINING WALLS TO BE PROPERLY SHORED BEFORE BACKFILLING. HEAVY EQUIPMENT SHALL NOT BE ALLOWED WITHIN 5 FEET OF THESE WALLS. USE MECHANICAL HAND TAMPERS FOR COMPACTING BACKFILL AGAINST WALLS.
10. CONTRACTOR SHALL BE RESPONSIBLE FOR ADEQUATE PROTECTION OF ALL EXCAVATION SLOPES. WHERE NECESSARY SHEETING AND SHORING OF EXCAVATION SHALL BE PROVIDED WITH ALL REQUIRED TIE BACKS AND BRACING, TO BE DESIGNED BY A PROFESSIONAL ENGINEER REGISTERED IN THE STATE OF THE PROJECT LOCATION.
11. FOUNDATION DESIGN PARAMETERS (VALUES ASSUMED IF NOT SPECIFICALLY STATED IN SOILS REPORT)

ACTIVE EARTH PRESSURE	69 psf/ft
PASSIVE EARTH PRESSURE	287 psf/ft
AT REST EARTH PRESSURE	46 psf/ft
SOIL FRICTION COEFFICIENT	.35
MODULUS OF SUBGRADE UNDER SLAB ON GRADE (K)	125 PCI

12. RETAINING WALLS SHALL HAVE A MINIMUM OF TWO FEET OF FREE DRAINING GRANULAR FILL AGAINST THE BACK OF THE WALL OR SHALL HAVE AN ACCEPTABLE COMMERCIAL GRADE DRAINAGE MAT PLACED AGAINST THE WALL.
13. REINFORCING IN ALL CONTINUOUS STRIP FOOTINGS SHALL HAVE CORNER BARS OR DOWELS PROVIDED AT ALL CORNERS AND INTERSECTIONS.

SHOP DRAWINGS

1. ALL SHOP DRAWINGS MUST BE REVIEWED AND STAMPED BY THE GENERAL CONTRACTOR PRIOR TO SUBMITTAL.
2. CONTRACTOR SHALL PROVIDE IN HIS SCHEDULE FOR A SHOP DRAWING REVIEW AND RETURN TIME OF A MINIMUM OF FIFTEEN WORKING DAYS IN THE STRUCTURAL ENGINEER'S OFFICE.
3. THE GENERAL CONTRACTOR SHALL SUBMIT SHOP DRAWINGS TO ENGINEER FOR REVIEW OF THE FOLLOWING APPLICABLE ITEMS:
   A. ALL STRUCTURAL STEEL INCLUDING MISCELLANEOUS EMBEDMENTS. STEEL FABRICATION SHOP DRAWINGS ARE TO BE SUBMITTED TO STRUCTURAL ENGINEER FOR APPROVAL PRIOR TO FABRICATION. THE STRUCTURAL ENGINEER IS TO REVIEW DRAWINGS FOR COMPLIANCE WITH DESIGN DOCUMENTS. ENGINEER IS TO REVIEW TYPE OF MATERIAL, MEMBER SIZES, AND CONNECTIONS AND RETURN DRAWINGS TO THE STEEL FABRICATOR NOTING ANY DISCREPANCIES. THE STEEL FABRICATOR IS RESPONSIBLE FOR ALL FABRICATION DIMENSIONS.
   B. REINFORCING STEEL.
   C. CONCRETE MIX DESIGNS.
   D. CONSTRUCTION JOINT LOCATIONS ON STRUCTURAL FLOORS.
   E. WOOD TRUSSES WITH CALCULATIONS (*)
   F. PRECAST CMU LINTELS
   G. ANCHOR BOLT SUBMITTAL
   H. MECHANICAL EQUIPMENT REQUIRING STRUCTURAL SUPPORT
   I. CONCRETE CURING MATERIALS
   J. MECHANICAL ANCHOR SUBSTITUTIONS
   K. ARCHITECTURAL AND STRUCTURAL PRECAST ELEMENTS

ITEMS MARKED (*) SHALL HAVE SHOP DRAWINGS SEALED BY A PROFESSIONAL ENGINEER REGISTERED IN THE STATE OF THE PROJECT LOCATION.

CONCRETE

A. GENERAL SPECIFICATIONS

1. ALL CONCRETE DESIGN AND CONSTRUCTION SHALL CONFORM TO THE 'SPECIFICATIONS FOR STRUCTURAL CONCRETE FOR BUILDINGS', (A.C.I. 301-99) AND 'BUILDING CODE REQUIREMENTS FOR REINFORCED CONCRETE', (A.C.I. 318-02).
2. ALL CONCRETE CONSTRUCTION SHALL CONFORM TO THE 'SPECIFICATIONS FOR TOLERANCES FOR CONCRETE CONSTRUCTION AND MATERIALS, (ACI 117-90)
3. ALL CONCRETE SHALL BE READY-MIXED MEETING THE REQUIREMENTS OF ASTM C-94, "SPECIFICATION FOR READY-MIXED CONCRETE".
   NO WATER SHALL BE ADDED TO THE CONCRETE AT THE JOBSITE. IT SHALL BE THE RESPONSIBILITY OF THE CONTRACTOR TO COORDINATE WITH THE CONCRETE SUPPLIER TO ENSURE A PUMPABLE AND WORKABLE MIX WITHOUT THE ADDITION OF WATER AT THE JOBSITE.
   CONCRETE PLACEMENT IS TO CONFORM WITH ACI 305-99 HOT WEATHER CONCRETING AND ACI 306-88 COLD WEATHER CONCRETING. MINIMUM TEMPERATURE OF CONCRETE AT TIME OF PLACEMENT AND MAINTAINED DURING CURING IS 55 DEGREES FAHRENHEIT.
   GROUT AT COLUMN BASES AND AT EXTERIOR WALL BASE SHALL BE NON-METALLIC, NON-SHRINK AND SHALL BE A FACTORY PREPARED MIXTURE OF NON AIR-ENTRAINING PORTLAND CEMENT, WELL GRADED, SHARP SILICA SAND AND OTHER ADMIXTURES AS REQUIRED TO PRODUCE A NON SHRINK GROUT. GROUT SHALL CONFORM TO ASTM C-1107 GRADE C.
   FORMWORK SHALL BE DESIGNED AND CONSTRUCTED/INSTALLED IN ACCORDANCE WITH ACI 347, "GUIDE TO FORMWORK FOR CONCRETE"
8. MEMBERS NOT TO BE LOADED UNTIL CONCRETE HAS REACHED ITS REQUIRED COMPRESSIVE STRENGTH.
9. CONCRETE SHALL BE TESTED IN ACCORDANCE WITH SECTION 5.6 OF ACI 318-02 (EVALUATION AND ACCEPTANCE OF CONCRETE).
10. ALL CONCRETE DEFECTS SHALL BE PROPERLY REPAIRED IMMEDIATELY IN ACCORDANCE WITH APPLICABLE REQUIREMENTS OF SECTION 5 OF ACI 301-LATEST EDITION.
11. ELEVATED FLOOR SLABS ARE TO HAVE A CONSTANT FLOOR THICKNESS AS SHOWN ON THE DESIGN DRAWINGS. FLOOR THICKNESS IS NOT TO BE ADJUSTED IN THE FIELD TO PROVIDE LEVEL SLAB.
12. ELEVATED SLABS ARE TO BE REINFORCED WITH WELDED WIRE FABRIC.
13. ELEVATED SLABS ARE NOT TO HAVE SAWED CONTROL JOINTS.
14. ADHESIVE ANCHORS SHALL BE HIT HY 150 MAX INJECTION ADHESIVE ANCHORING SYSTEM WITH 'HAS' STANDARD RODS BY HILTI FASTENING SYSTEMS OR APPROVED EQUAL. MINIMUM EMBEDMENT SHALL BE AS SPECIFIED BY THE MFG. UNLESS NOTED OTHERWISE ON THE ENGINEERING DRAWINGS.
15. EXPANSION ANCHORS SHALL BE KWIK BOLT II WEDGE TYPE ANCHORS BY HILTI FASTENING OR APPROVED EQUAL. MINIMUM EMBEDMENT SHALL BE AS SPECIFIED BY THE MANUFACTURER UNLESS NOTED OTHERWISE ON THE ENGINEERING DRAWINGS.

B. MIX DESIGN SPECIFICATIONS

1. CONCRETE SHALL HAVE A MINIMUM COMPRESSIVE STRENGTH (f'c) AT 28 DAYS AS FOLLOWS:
   COLUMN AND WALL FOOTINGS, EXTERIOR SLAB ON GRADE f'c = 3000 PSI
   INTERIOR SLAB ON GRADE f'c = 3000 PSI
2. CONCRETE IS TO BE NORMAL WEIGHT AND MADE WITH TYPE 1 PORTLAND CEMENT CONFORMING TO ASTM C150 SPECIFICATION, "STANDARD SPECIFICATION FOR PORTLAND CEMENT".
3. CLASS F FLYASH IS TO BE LIMITED TO A MAXIMUM OF 20% OF TOTAL CEMENTITIOUS MATERIAL WEIGHT. FLYASH IS NOT PERMITTED FOR INTERIOR FLOOR SLABS.
4. NO ADMIXTURES CONTAINING CALCIUM CHLORIDE SHALL BE PERMITTED IN ANY MIX DESIGN.
5. A MID RANGE WATER REDUCING ADMIXTURE IN CONFORMANCE WITH ASTM C494 TYPE 'A' IS TO BE USED TO REDUCE WATER REQUIREMENTS. DOSAGE AMOUNT IS NOT TO EXCEED 6 OZ. PER 100 POUNDS OF CEMENTITIOUS MATERIAL.
5. WATER/CEMENT RATIOS SHALL NOT EXCEED 0.6 FOR f'c=3000 PSI CONCRETE NOR 0.5 FOR f'c=4000 PSI CONCRETE
6. MAXIMUM SLUMP SHALL BE 5".
7. CONCRETE AGGREGATE GRADATION SHALL BE IN ACCORDANCE WITH ASTM C33. "SPECIFICATION FOR CONCRETE AGGREGATE".
   A. COARSE AGGREGATE
   COARSE AGGREGATE GRADATION SHALL HAVE A MINIMUM SIZE #57 STONE MIX PER ASTM C33. FOR 6" SLABS OR GREATER, LARGER COURSE AGGREGATE MIXS UP TO #467 ARE ACCEPTABLE TO MINIMIZE SHRINKAGE CRACKING.
   B. FINE AGGREGATE
   FINE AGGREGATE SHALL CONSIST OF NATURAL SAND OR A COMBINATION THEREOF, WITH A FINENESS MODULUS BETWEEN 2.3 AND 3.1.
   FINE AGGREGATE CONTENT IS TO BE BETWEEN 35% AND 45% BY WEIGHT OR VOLUME OF THE TOTAL AGGREGATE CONTENT.
8. CONCRETE MIX DESIGNS INCLUDING W/C RATIOS AND SLUMPS ARE TO BE PREPARED BY CONCRETE SUPPLIER AND SUBMITTED TO ENGINEER FOR APPROVAL A MINIMUM OF 14 DAYS PRIOR TO CONCRETE WORK COMMENCING. CONCRETE MIX DESIGNS ARE TO BE PROPORTIONED IN ACCORDANCE WITH SECTION 5.3 OR 5.4 OF ACI 318-02.
9. ALL EXTERIOR CONCRETE IS TO HAVE 5 PERCENT AIR ENTRAINMENT IN ACCORDANCE WITH ASTM C260.

REINFORCING STEEL

1. REINFORCING STEEL SHALL BE HIGH STRENGTH DEFORMED BARS CONFORMING TO ASTM A615, GRADE 60, EXCEPT REINFORCING THAT IS TO BE WELDED SHALL CONFORM TO ASTM A706.
2. WELDED WIRE MESH SHALL CONFORM TO ASTM A185 AND SHALL BE LAPPED ONE FULL MESH AT END SPLICES AND BE WIRED TOGETHER. MESH SHALL BE SUPPLIED IN SHEETS, NOT ROLLS AND BE INSTALLED ON CHAIRS.
3. REINFORCING STEEL DETAILING, FABRICATION AND PLACING SHALL CONFORM TO THE FOLLOWING:
   -C.R.S.I. "MANUAL OF STANDARD PRACTICE", LATEST EDITION
   -A.C.I. 318-02 "BUILDING CODE REQUIREMENTS FOR REINFORCED CONCRETE"
   -ACI 315-99, "DETAILS AND DETAILING OF CONCRETE REINFORCING".
4. BARS SPLICED BY NONCONTACT LAP SPLICES SHALL NOT BE SPACED TRANSVERSELY FARTHER APART THAN ONE-FIFTH THE REQUIRED LAP SPLICE LENGTH, NOR 6".
5. REINFORCEMENT PROTECTION SHALL BE:
   CONCRETE POURED AGAINST EARTH------------------------3"
   CONCRETE POURED IN FORMS EXPOSED TO WEATHER OR EARTH------2"
   COLUMNS AND BEAMS (TIE BARS)------------------------1 1/2"
   SLABS AND WALLS NOT EXPOSED TO WEATHER-----------------3/4"
4. REINFORCING BARS SHALL NOT BE WELDED UNLESS OTHERWISE NOTED ON THE STRUCTURAL DRAWINGS. IF WELDING HAS BEEN NOTED ON THE STRUCTURAL DRAWINGS THOSE WELDS SHALL BE IN ACCORDANCE WITH THE 'STRUCTURAL WELDING CODE-REINFORCING STEEL' (AWS D1.4).

SLABS ON GRADE

1. CONCRETE FLOOR SLAB ON GRADE CONSTRUCTION SHALL CONFORM TO ACI 302.1R96 "GUIDE FOR CONCRETE FLOOR AND SLAB CONSTRUCTION". FLOOR IS TO BE A SINGLE COURSE, MONOLITHIC SLAB ON GRADE.
2. FLOOR SLABS ARE TO BE PLACED OVER COMPACTED EARTH BASE OR CRUSHED STONE BASE, AS NOTED ON THE SLAB PLAN. SUB-GRADE FOR SLAB SHALL BE COMPACTED AND TESTED AND HAVE A MAXIMUM ELEVATION DIFFERENCE OF PLUS OR MINUS 1/10 OF A FOOT.
3. CRUSHED STONE BASE IS TO BE TYPE 1, GRADATION C, IN CONFORMANCE WITH ASTM D 1241-68 STANDARD SPECIFICATION FOR MATERIALS FOR SOIL-AGGREGATE SUBBASE, BASE AND SURFACE COURSES.
4. IN ORDER TO MINIMIZE PLASTIC SHRINKAGE CRACKS IN THE FLOOR SLAB, CONCRETE IS NOT TO BE PLACED WHEN THE EVAPORATION RATE OF WATER IS GREATER THAN 0.2 POUNDS PER SQUARE FOOT SURFACE AREA PER HOUR UNLESS MEASURES ARE TAKEN TO COMPENSATE FOR THE HIGH RATE OF EVAPORATION AS DESCRIBED IN ACI 305-99. EVAPORATION RATES GREATER THAN 0.2 LB/SF/HR TYPICALLY OCCUR WHEN THE AIR TEMPERATURE IS GREATER THAN 90°F, RELATIVE HUMIDITY IS 80% OR LESS, AND WIND VELOCITY IS 10 MPH OR GREATER.
5. THE FOLLOWING INFORMATION IS TO BE RECORDED BY THE GENERAL CONTRACTOR DURING PLACEMENT OF THE SLAB CONCRETE AND SENT TO THE ENGINEER OF RECORD:
   - AIR TEMPERATURE
   - WEATHER CONDITIONS
   - WIND SPEED
   - CONCRETE SLUMP
   - CONCRETE TEMPERATURE IN ACCORDANCE WITH ASTM C1064.
   - RELATIVE HUMIDITY
   - EVAPORATIVE RATE OF WATER
6. FLOOR SLAB IS TO HAVE APPROPRIATELY SPACED CONSTRUCTION AND CONTROL JOINTS.
7. ISOLATION JOINTS SHALL BE AS SHOWN ON DRAWING AND FILLED WITH POLYURETHANE JOINT FILLER UNO BY ARCHITECT.

STRUCTURAL STEEL

A. GENERAL SPECIFICATIONS

1. STRUCTURAL STEEL SHALL BE DESIGNED, DETAILED, FABRICATED AND ERECTED IN ACCORDANCE WITH: -THE A.I.S.C. 'SPECIFICATION FOR STRUCTURAL STEEL BUILDINGS', 1989 EDITION,
   -THE A.I.S.C. 'CODE OF STANDARD PRACTICE FOR STEEL BUILDINGS AND BRIDGES', 1992 EDITION,
   -THE A.I.S.C. 'SPECIFICATION FOR ALLOWABLE STRESS DESIGN OF SINGLE ANGLE MEMBERS'.
2. ALL STRUCTURAL STEEL SHALL HAVE GRADES AS LISTED BELOW UNLESS NOTED OTHERWISE ON PLANS.
   WIDE FLANGE SHAPES - ASTM A992, 50 KSI.
   OTHER ROLLED SHAPES - ASTM A36, 36 KSI.
   HSS SQUARE, RECTANGULAR AND ROUND MEMBERS - ASTM A500, GRADE 'B'.
   STANDARD PIPE MEMBERS - ASTM A53, TYPE 'E', GRADE 'B'.
   ANCHOR BOLTS - ASTM A36, 36 KSI.
   MISC. ITEMS - ASTM A36, 36 KSI.
3. PROVIDE TEMPORARY BRACING AS NECESSARY TO WITHSTAND ALL CONSTRUCTION AND/OR WIND LOADS UNTIL ALL FIELD CONNECTIONS ARE COMPLETED AND SHEAR WALLS AND DECKS ARE IN PLACE.
4. SPLICING OF THE STRUCTURAL STEEL IS PROHIBITED WITHOUT PRIOR APPROVAL OF THE STRUCTURAL ENGINEER AS TO THE LOCATION AND TYPE OF THE SPLICE TO BE MADE.
5. NO CHANGE IN SIZE OR POSITION OF ANY STRUCTURAL ELEMENT NOR HOLES, SLOTS ETC. SHALL BE MADE WITHOUT PRIOR APPROVAL OF THE STRUCTURAL ENGINEER.
6. ALL STRUCTURAL STEEL AND MICELLANEOUS STEEL IS TO HAVE ONE SHOP COAT OF GREY PRIMER PAINT. STEEL IN CONTACT WITH CONCRETE, AT TOP OF FLANGE OF COMPOSITE BEAMS, AND BEAMS TO RECEIVE FIRE PROOFING CEMENTITIOUS SPRAY SHALL NOT BE PAINTED.

B. CONNECTION DESIGN

1. UNLESS NOTED OTHERWISE, STRUCTURAL STEEL CONNECTIONS TO BE MADE USING STANDARD FRAMED BEAM OR SINGLE PLATE SHEAR CONNECTIONS WITH ASTM A325 STEEL BOLTS CONFORMING TO THE A.I.S.C. 'SPECIFICATION FOR STRUCTURAL JOINTS USING A325 OR A490 BOLTS', 1985 EDITION, OR WELDED EQUIVALENT.
2. STEEL FABRICATOR TO DESIGN NON-COMPOSITE BEAM CONNECTIONS TO SUPPORT 60% OF THE TOTAL ALLOWABLE UNIFORM LOAD FOR EACH GIVEN BEAM AND SPAN AS DEFINED IN PART 2 'ALLOWABLE LOADS ON BEAMS' TABLES IN THE AISC 'MANUAL OF STEEL CONSTRUCTION', NINTH EDITION, ALLOWABLE STRESS DESIGN, OR FOR THE REACTIONS AS SPECIFIED ON THE DESIGN DRAWINGS OR A MINIMUM OF 10 KIPS, WHICHEVER IS GREATEST.
3. STEEL FABRICATOR TO DESIGN COMPOSITE BEAM CONNECTIONS FOR THE REACTIONS AS SPECIFIED ON THE DESIGN DRAWINGS. IF REACTIONS HAVE BEEN LEFT OFF THE DESIGN DRAWINGS, CONTACT STRUCTURAL ENGINEER TO OBTAIN THESE REACTIONS.
4. UNLESS OTHERWISE NOTED, BOLTS TO BE INSTALLED IN PROPERLY ALIGNED HOLES AND TIGHTENED TO THE SNUG TIGHT CONDITION. THE SNUG TIGHT CONDITION IS DEFINED AS THE TIGHTNESS THAT EXISTS WHEN ALL PLIES IN A JOINT ARE IN FIRM CONTACT. THIS MAY BE ATTAINED BY A FEW IMPACTS OF AN IMPACT WRENCH OR THE FULL EFFORT OF A MAN USING AN ORDINARY WRENCH.
5. HOLE TYPES AND WASHER REQUIREMENTS
   A. STANDARD HOLES - STANDARD HOLES SHALL BE PROVIDED IN MEMBER-TO-MEMBER CONNECTIONS, UNLESS OVERSIZED, SHORT-SLOTTED, OR LONG-SLOTTED CONNECTIONS ARE CALLED FOR ON DESIGN DRAWINGS.
   B. OVERSIZED HOLES - OVERSIZED HOLES ARE PERMITTED IN ANY OR ALL PLIES OF SLIP-CRITICAL CONNECTIONS, BUT SHALL NOT BE PERMITTED IN BEARING-TYPE CONNECTIONS. HARDENED WASHERS SHALL BE INSTALLED OVER ALL OVERSIZED HOLES.
   C. SHORT-SLOTTED HOLES - SHORT-SLOTTED HOLES ARE PERMITTED IN ANY OR ALL PLIES OF SLIP-CRITICAL OR BEARING-TYPE CONNECTIONS. THE SLOTS ARE PERMITTED WITHOUT REGARD TO DIRECTION OF LOADING IN SLIP-CRITICAL CONNECTIONS, BUT THE LENGTH SHALL BE NORMAL TO THE DIRECTION OF THE LOAD IN BEARING TYPE CONNECTIONS. WASHERS SHALL BE INSTALLED OVER SHORT-SLOTTED HOLES IN AN OUTER PLY. WHERE A325 OR A490 BOLTS ARE USED, WASHERS SHALL BE HARDENED CONFORMING TO ASTM F436.
   D. LONG-SLOTTED HOLES - LONG-SLOTTED HOLES ARE PERMITTED IN ONLY ONE OF THE CONNECTED PARTS OF EITHER A SLIP-CRITICAL OR BEARING-TYPE CONNECTION AT AN INDIVIDUAL FAYING SURFACE. LONG-SLOTTED HOLES ARE PERMITTED WITHOUT REGARD TO DIRECTION OF LOADING IN SLIP-CRITICAL CONNECTIONS, BUT THE LENGTH SHALL BE NORMAL TO THE DIRECTION OF THE LOAD IN BEARING TYPE CONNECTIONS. WHERE LONG-SLOTTED HOLES ARE USED IN AN OUTER PLY, PLATE WASHERS OR A CONTINUOUS BAR WITH STANDARD HOLES, HAVING A SIZE SUFFICIENT TO COMPLETELY COVER THE SLOT AFTER INSTALLATION, SHALL BE PROVIDED. IN HIGH-STRENGTH BOLTED CONNECTIONS, SUCH PLATE WASHERS OR CONTINUOUS BARS SHALL BE NOT LESS THAN 5/16" THICK AND SHALL BE OF STRUCTURAL GRADE MATERIAL, BUT NEED NOT BE HARDENED.
   E. FOR A490 BOLTS GREATER THAN 1" IN DIAMETER A 5/16" MINIMUM THICKNESS HARDENED WASHER CONFORMING TO ASTM F436 SHALL BE USED UNDER BOTH THE HEAD AND THE NUT IN AN OVERSIZED HOLE OR IN AN OUTER PLY OF SLOTTED HOLES. MULTIPLE HARDENED WASHERS WITH A COMBINED THICKNESS EQUAL TO OR GREATER THAN 5/16" DO NOT SATISFY THIS REQUIREMENT.
   F. WHERE THE OUTER FACE OF THE BOLTED PARTS HAS A SLOPE GREATER THAN 1:20 WITH RESPECT TO A PLANE NORMAL TO THE BOLT AXIS, A HARDENED BEVELED WASHER SHALL BE USED TO COMPENSATE FOR THE LACK OF PARALLELISM.
6. WELDED CONNECTIONS TO CONFORM TO A.W.S. D1.1-98 'STRUCTURAL WELDING CODE- STEEL'.
7. WELDING IS TO BE PERFORMED BY A WELDER QUALIFIED TO PERFORM THE SPECIFIED WELDS. QUALIFICATION OF THE WELDER SHALL BE DETERMINED BY TESTS AS PRESCRIBED IN SECTION 4, PART C, OF THE AMERICAN WELDING SOCIETY - STRUCTURAL WELDING CODE - STEEL, A.W.S. D1.1-98.
8. WELDS ARE TO BE INSPECTED BY A QUALIFIED INSPECTOR. A QUALIFIED INSPECTOR SHALL MAINTAIN CURRENT CERTIFICATION AS AN AMERICAN WELDING SOCIETY (A.W.S.) CERTIFIED WELDING INSPECTOR (CWI) IN ACCORDANCE WITH THE PROVISIONS OF A.W.S. QC1, 'STANDARD AND GUIDE FOR QUALIFICATION AND CERTIFICATION OF WELDING INSPECTORS'.
9. MINIMUM WELDS TO BE BY AISC AND/OR AWS, BUT NOT LESS THAN 3/16" E70XX CONTINUOUS FILLET UNLESS OTHERWISE NOTED.
10. WHERE FIELD WELDING IS REQUIRED, WELD AREAS SHALL BE STRIPPED OF PAINT AND RUST. ALL EXPOSED STEEL SHALL BE PAINTED AFTER WELDING.

GENERAL WOOD NOTES:

1. LUMBER GRADES BASED ON 1997 SOUTHERN PINE INSPECTION BUREAU (SPIB) GRADING RULES CONFORMING TO U.S. DEPT. OF COMMERCE VOLUNTARY PRODUCT STANDARD PS 20-70 (AMERICAN SOFTWOOD LUMBER STANDARD).
2. ALL WOOD FRAMING SHALL BE SOUTHERN PINE, GRADE 2, KILN DRIED WITH A 19% MAXIMUM MOISTURE CONTENT UNO.
3. ALL LUMBER DIMENSIONS SHOWN ON DRAWINGS ARE NOMINAL.
4. PRESSURE TREATED LUMBER SHALL CONFORM TO THE AMERICAN WOOD PRESERVER'S ASSOCIATION (AWPA) STANDARDS WITH 0.25 POUNDS PER CUBIC FOOT OF CHROMATED COPPER ARSENATE (CCA). ALL PRESSURE TREATED LUMBER CONNECTORS SHALL BE GALVANIZED.
5. LUMBER SHALL BE UNLOADED IN A DRY PLACE, NOT IN CONTACT WITH GROUND. LUMBER STORED IN OPEN AREA SHOULD BE ELEVATED ON STRINGERS TO ALLOW AIR CIRCULATION AND COVERED WITH MATERIAL THAT WILL GIVE PROTECTION FROM THE ELEMENTS BUT POROUS ENOUGH FOR MOISTURE TO ESCAPE. FRAMING LUMBER SHOULD BE ENCLOSED AND UNDER ROOF AS SOON AS POSSIBLE FOR PROTECTION FROM THE ELEMENTS.
6. ALL SHEATHING SHALL MEET THE REQUIREMENTS OF THE LATEST EDITION OF U.S PRODUCT STD PS-1 OR APA PRP-108 PERFORMANCE STANDARDS AND IDENTIFIED WITH APPROPRIATE TRADEMARK OF THE AMERICAN PLYWOOD ASSOCIATION (APA).
7. ROOF SHEATHING SHALL BE 5/8" THICK, APA RATED EXPOSURE 1. PANELS SHALL BE INSTALLED WITH THE LONG DIMENSION OR STRENGTH AXIS OF THE PANEL ACROSS SUPPORTS WITH PANEL CONTINUOUS OVER TWO OR MORE SUPPORTS. ALLOW 1/8" SPACING AT PANEL ENDS AND EDGES USING GALVANIZED PANEL CLIPS. STAGGER ENDS OF PANELS. NAIL TO RAFTERS OR WOOD TRUSS TOP CHORDS 6" ON CENTER ALONG SUPPORTED EDGES AND 12" ON CENTER AT INTERMEDIATE SUPPORTS USING GALVANIZED 6d NAILS.
8. SOFFIT SHEATHING SHALL BE 7/16" THICK, APA RATED A-C EXTERIOR.
9. EXTERIOR WALL SHEATHING SHALL BE 5/8" THICK, APA RATED EXPOSURE 1.
10. PREFABRICATED ROOF AND FLOOR TRUSSES TO BE DESIGNED PER MANUFACTURER BY A PROFESSIONAL ENGINEER REGISTERED IN THE PROJECT LOCATION, USING THE LOADS SHOWN. TRUSSES ARE TO BE METAL PLATE CONNECTED AND DESIGNED AND FABRICATED PER TRUSS PLATE INSTITUTE SPECIFICATIONS (TPI) AND THE WOOD TRUSS COUNCIL OF AMERICA. TRUSSES ARE TO BE TEMPORARILY BRACED DURING ERECTION UNTIL ROOF SHEATHING AND BOTTOM CHORD BRACING IS IN PLACE. TRUSSES ARE TO BE BRACED PER TPI SPECIFICATIONS. TRUSS FABRICATOR TO SUBMIT APPROVAL DRAWINGS TO ENGINEER PRIOR TO CONSTRUCTION
11. UNLESS NOTED OTHERWISE, WOOD FRAMING FASTENING IS TO BE INSTALLED PER TABLE 2304.9.1.2, FASTENING SCHEDULE OF THE N.C. STATE BUILDING CODE, 2012 EDITION.
12. (3) STAIR STRINGERS ARE TO BE PROVIDED AT STAIRS WITH THE MINIMUM EFFECTIVE DEPTH NOT LESS THAN 3-1/2" AT NOTCHES.
13. WALL STUDS SHALL BE CAPPED WITH DOUBLE TOP PLATES TO PROVIDE OVERLAPPING AT CORNERS AND INTERSECTIONS.
14. DESIGN, DETAILING AND FABRICATION OF GLULAM SHALL CONFORM TO THE REQUIREMENTS OF NATIONAL EVALUATION SERVICE, INC. (NES) REPORT NO. NER-481.
15. LVL MEMBERS SHALL BE 1.9E MICROLAM AS MANUFACTURED BY TRUS JOIST MACMILLAN, OR APPROVED EQUIVALENT WITH ALLOWABLE STRESS AS LITED BELOW:
   A. Fb, EXTREME FIBER IN BENDING--------2600 psi
   B. Fv, HORIZONTAL SHEAR-------------285 psi
   C. Fc, COMP. PERPENDICULAR TO GRAIN----750 psi
   D. Fc, COMP. PARALLEL TO GRAIN--------2310 psi
   E. E, MODULUS OF ELASTICITY----------1,900,000 psl

STRUCTURAL DESIGN

DESIGN LOADS:

IMPORTANCE FACTORS: WIND (Iw) 1.15; SNOW (Is) 1.2; SEISMIC (Iε) 1.5

LIVE LOADS: Table 1607.1 — ROOF 20 psf; MEZZANINE N/A psf; FLOOR 50 psf

GROUND SNOW LOAD: Section 1608 — 18 psf

WIND LOAD: Table 1609 — BASIC WIND SPEED 90 mph (ASCE 7-05); EXPOSURE CATEGORY C; WIND BASE SHEAR (MWFRS) Vx = 13k, Vy = 35K

RAIN LOAD: Section 1611 — 3.5 Inches/Hour

SEISMIC DESIGN CATEGORY: ☐ A ☐ B ☒ C ☐ D

OCCUPANCY CATEGORY (T1604.5) IV

SPECRAL RESPONSE ACCELERATION Ss .35 %g S1 .1 %g

SITE CLASSIFICATION ☐ FIELD TEST ☒ PRESUMPTIVE ☐ HISTORICAL DATA

BASIC STRUCTURAL SYSTEM

X BEARING WALL; ___ BUILDING FRAME; ___ MOMENT FRAME; ___ DUAL W/SPECIAL MOMENT FRAME; ___ DUAL W/ INTERMEDIATE R/C OR SPECIAL STEEL; ___ INVERTED PENDULUM

SEISMIC BASE SHEAR Vx = 45K Vy = 20K

ANALYSIS PROCEDURE ___ SIMPLIFIED X EQUIVALENT LATERAL FORCE ___ MODAL

ARCHITECTURAL, MECHANICAL, COMPONENTS ANCHORED? YES

LATERAL DESIGN CONTROL: EARTHQUAKE ___ WIND X

SOIL BEARING CAPACITIES:

FIELD TEST (provide copy of test report)	2,500 psf
PRESUMPTIVE BEARING CAPACITY	___ psf
PILE SIZE, TYPE, AND CAPACITY	___ psf

NORTH CAROLINA PROFESSIONAL ENGINEER SEAL 027444 SCOTT M. WESTMORELAND

Scott Westmoreland

Signed by: Scott Westmoreland
Date & Time: Oct 6 2014 11:50 AM CoSign

ESD architecture • interior design
1300 South Mint Street, Suite 300, Charlotte, NC 28203 • Phone: 704-373-1900
Email: esd@esdarch.com • Fax: 704-373-0902

SRS
SOLID ROCK STRUCTURAL PLLC
SCOTT WESTMORELAND, P.E.
71 GLENN HILL LANE HIDDENITE, N.C. 28636
PHONE: 704-819-6415
FAX: 704-585-6529
SCOTT@SOLIDROCKSTRUCTURAL.COM
FIRM LICENSE NO. P-0390

SOUTHEASTERN EMS
NEW SOUTHEASTERN EMS FOR RUTHERFORD COUNTY

ISSUE DATE: 9-29-14
REVISION 1: --
REVISION 2: --
REVISION 3: --
REVISION 4: --
PROJECT #:
CONTENT:

GENERAL NOTES

DRAWN BY: SMW
CADD FILE NAME: 14-70-S0.0

THIS DRAWING AND THE DESIGN SHOWN ARE THE PROPERTY OF ESD. THE REPRODUCTION, OR USE OF THIS DRAWING WITHOUT THEIR WRITTEN CONSENT IS PROHIBITED, ANY INFRINGEMENT IS SUBJECT TO LEGAL ACTION.

Sheet S0.0

STATEMENT OF SPECIAL INSPECTIONS:

1. THE OWNER SHALL EMPLOY ONE OR MORE SPECIAL INSPECTORS DURING CONSTRUCTION ON THE TYPES OF WORK LISTED IN SECTION 1705 OF THE 2012 NC BUILDING CODE. THE SPECIAL INSPECTOR(S) SHALL BE A QUALIFIED PERSON WHO SHALL DEMONSTRATE COMPETENCE, TO THE SATISFACTION OF THE BUILDING OFFICIAL, FOR INSPECTION OF THE PARTICULAR TYPE OF CONSTRUCTION OR OPERATION REQUIRING SPECIAL INSPECTION. THESE INSPECTIONS ARE IN ADDITION TO THE INSPECTIONS SPECIFIED IN THE NORTH CAROLINA ADMINISTRATION AND ENFORCEMENT REQUIREMENTS CODE.
2. CONCRETE CONSTRUCTION: NOT REQUIRED FOR THIS PROJECT
3. STEEL CONSTRUCTION: REQUIRED VERIFICATION AND INSPECTION OF STEEL CONSTRUCTION SHALL BE IN ACCORDANCE WITH TABLE 1704.3 AND SECTION 1704.3.
4. MASONRY CONSTRUCTION: MASONRY FOR THIS PROJECT IS NONSTRUCTURAL AND THEREFORE NEEDS NO SPECIAL INSPECTIONS.
5. WOOD CONSTRUCTION: SPECIAL INSPECTIONS OF THE FABRICATION PROCESS OF WOOD STRUCTURAL ELEMENTS AND ASSEMBLIES SHALL BE IN ACCORDANCE WITH SECTION 1704.2.
6. SOILS: SPECIAL INSPECTIONS FOR EXISTING SITE SOIL CONDITIONS, FILL PLACEMENT AND LOAD BEARING REQUIREMENTS SHALL FOLLOW SECTION 1704.7 AND TABLE 1704.7
7. QUALITY ASSURANCE PLAN – SEE SHEET S0.2, SPECIAL INSPECTOR TO PROVIDE ALL INFORMATION AS SPECIFIED ON QUALITY ASSURANCE PLAN.

TABLE 1704.3
REQUIRED VERIFICATION AND INSPECTION OF STEEL CONSTRUCTION

VERIFICATION AND INSPECTION	CONTINUOUS [A]	PERIODIC [B]	REFERENCED STANDARD [C]	IBC REFERENCE
1. MATERIAL VERIFICATION OF STRUCTURAL STEEL:				
A. FOR STRUCTURAL STEEL, IDENTIFICATION MARKINGS TO CONFORM TO AISC 360		X	AISC 360, SECTION M5.5	
B. FOR OTHER STEEL, IDENTIFICATION MARKINGS TO CONFORM TO ASTM STANDARDS SPECIFIED IN THE APPROVED CONSTRUCTION DOCUMENTS		X	APPLICABLE ASTM MATERIAL STANDARDS	
C. MANUFACTURER'S CERTIFIED TEST REPORTS		X		
2. MATERIAL VERIFICATION OF WELD FILLER MATERIAL:				
A. IDENTIFICATION MARKINGS TO CONFORM TO AWS SPECIFICATION IN THE APPROVED CONSTRUCTION DOCUMENTS.		X	AISC 360, SECTION A3.5 AND APPLICABLE AWS A5 DOCUMENTS	
B. MANUFACTURER'S CERTIFICATE OF COMPLIANCE REQUIRED		X		
3. INSPECTION OF WELDING:				
A. STRUCTURAL STEEL:				
1) COMPLETE PENETRATION GROOVE WELDS	X		AWS D1.1	1704.3.1
2) SINGLE-PASS FILLET WELDS < 5/16"		X		

A. CONTINUOUS – THE FULL TIME OBSERVATION OF WORK REQUIRING SPECIAL INSPECTION BY AN APPROVED SPECIAL INSPECTOR WHO IS PRESENT IN THE AREA WHERE THE WORK IS BEING PERFORMED.

B. PERIODIC – THE PART TIME OR INTERMITTENT OBSERVATION OF WORK REQUIRING SPECIAL INSPECTION BY AN APPROVED SPECIAL INSPECTOR WHO IS PRESENT IN THE AREA WHERE THE WORK HAS BEEN OR IS BEING PERFORMED AND AT THE COMPLETION OF THE WORK.

TABLE 1704.7
REQUIRED VERIFICATION AND INSPECTION OF SOILS

VERIFICATION AND INSPECTION	CONTINUOUS	PERIODIC
1. VERIFY MATERIALS BELOW SHALLOW FOUNDATIONS ARE ADEQUATE TO ACHIEVE THE DESIGN BEARING CAPACITY.		X
2. VERIFY EXCAVATIONS ARE EXTENDED TO PROPER DEPTH AND HAVE REACHED PROPER MATERIAL		X
3. PERFORM CLASSIFICATION AND TESTING OF COMPACTED FILL MATERIALS.		X
4. VERIFY USE OF PROPER MATERIALS, DENSITIES AND LIFT THICKNESSES DURING PLACEMENT AND COMPACTION OF COMPACTED FILL.	X	
5. PRIOR TO PLACEMENT OF COMPACTED FILL, OBSERVE SUBGRADE AND VERIFY THAT SITE HAS BEEN PREPARED PROPERLY		X

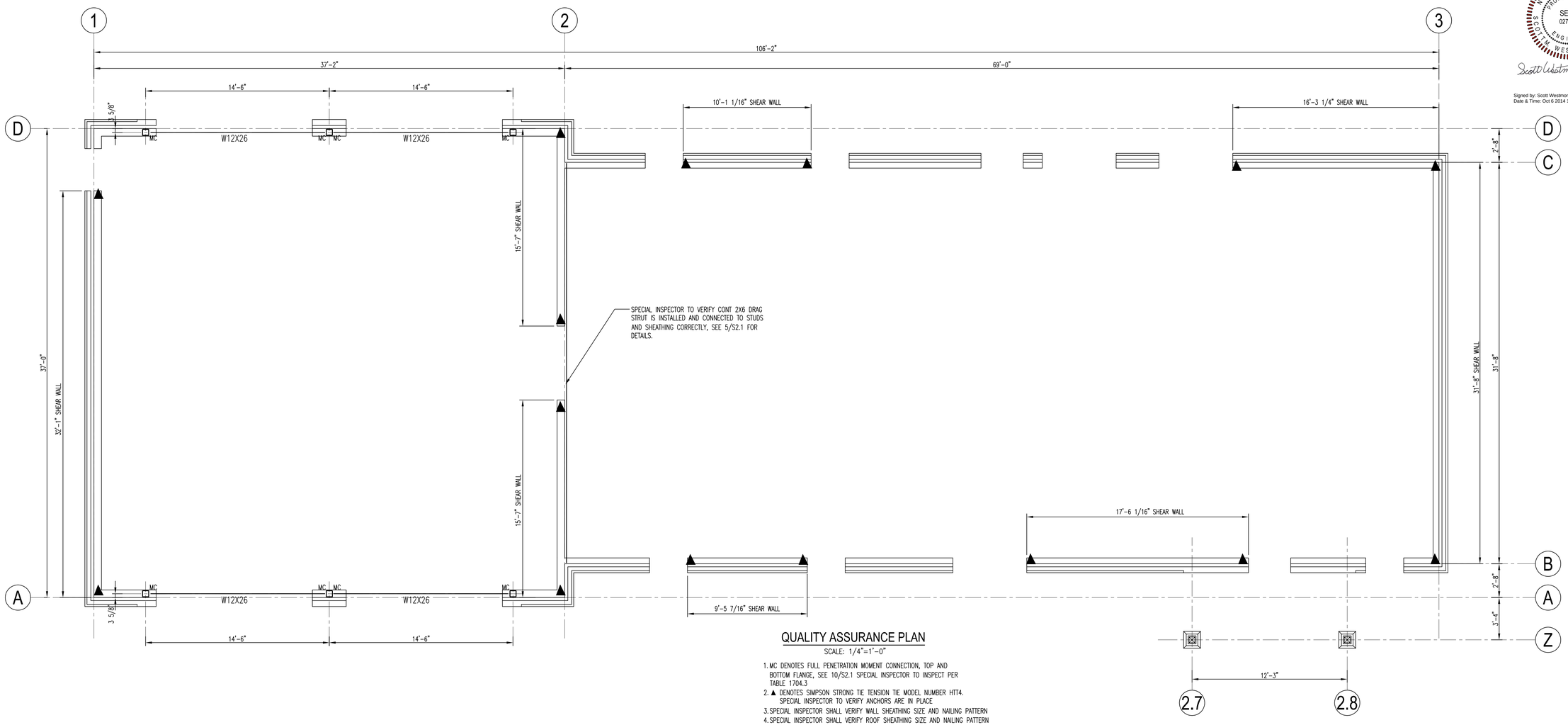

QUALITY ASSURANCE PLAN

SCALE: 1/4"=1'-0"

1. MC DENOTES FULL PENETRATION MOMENT CONNECTION, TOP AND BOTTOM FLANGE, SEE 10/S2.1 SPECIAL INSPECTOR TO INSPECT PER TABLE 1704.3
2. ▲ DENOTES SIMPSON STRONG TIE TENSION TIE MODEL NUMBER HTT4. SPECIAL INSPECTOR TO VERIFY ANCHORS ARE IN PLACE
3. SPECIAL INSPECTOR SHALL VERIFY WALL SHEATHING SIZE AND NAILING PATTERN
4. SPECIAL INSPECTOR SHALL VERIFY ROOF SHEATHING SIZE AND NAILING PATTERN

ESD
architecture • interior design
1300 South Mint Street, Suite 300, Charlotte, NC 28203
Email: esd@esdarch.com • Fax: 704-373-0902 • Phone: 704-373-1900

SRS
SOLID ROCK STRUCTURAL PLLC
SCOTT WESTMORELAND, P.E.
71 GLENN HILL LANE HIDDENITE, N.C. 28636
PHONE: 704-819-6415
FAX: 704-585-6529
SCOTT@SOLIDROCKSTRUCTURAL.COM
FIRM LICENSE NO. P-0390

NORTH CAROLINA PROFESSIONAL SEAL 027444 ENGINEER SCOTT M. WESTMORELAND

Scott Westmoreland

Signed by: Scott Westmoreland
Date & Time: Oct 6 2014 11:51 AM

SOUTHEASTERN EMS
NEW SOUTHEASTERN EMS FOR RUTHERFORD COUNTY

ISSUE DATE: 9-29-14
REVISION 1: --
REVISION 2: --
REVISION 3: --
REVISION 4: --

PROJECT #:
CONTENT:

SPECIAL INSPECTIONS QUALITY ASSURANCE PLAN

DRAWN BY: SMW

CADD FILE NAME: 14-70-S0.0

THIS DRAWING AND THE DESIGN SHOWN ARE THE PROPERTY OF ESD. THE REPRODUCTION, OR USE OF THIS DRAWING WITHOUT THEIR WRITTEN CONSENT IS PROHIBITED. ANY INFRINGEMENT IS SUBJECT TO LEGAL ACTION.

Sheet
S0.1

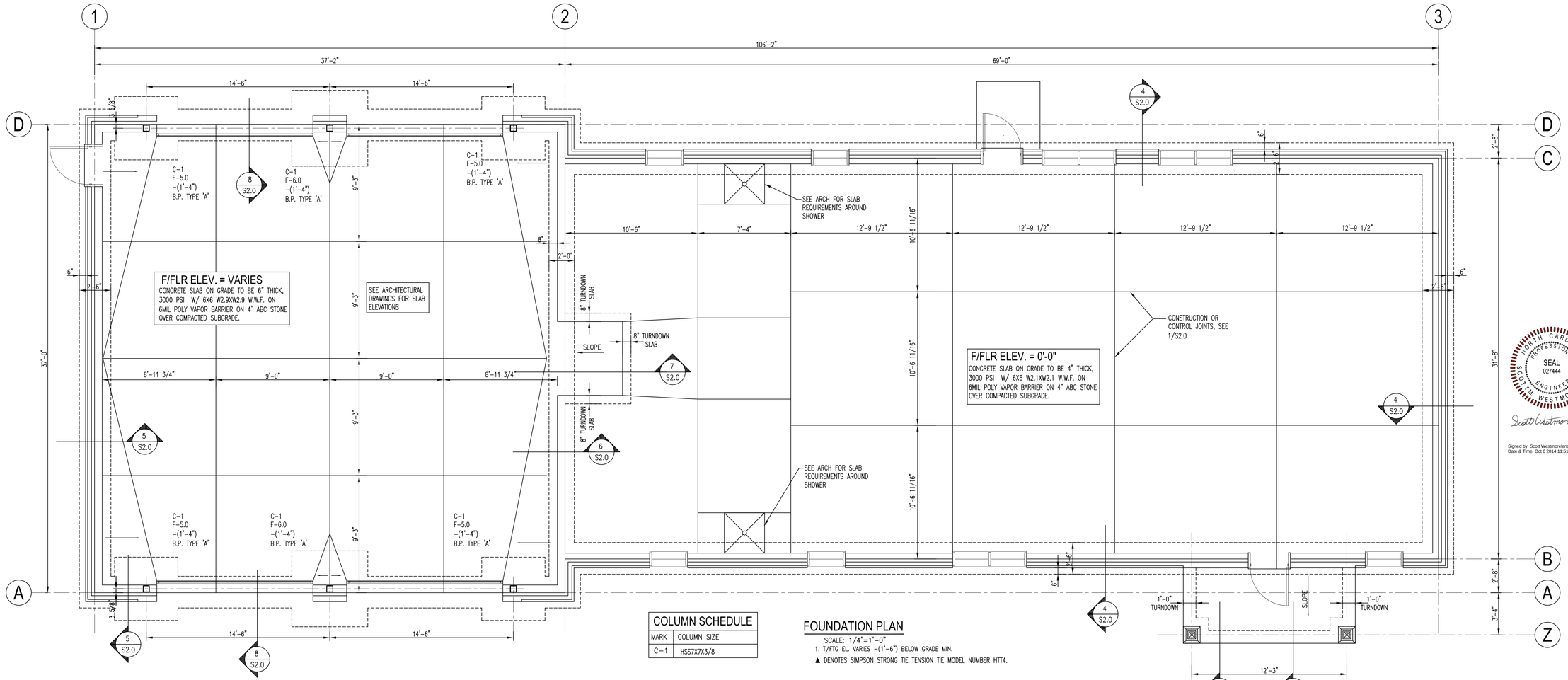

COLUMN SCHEDULE

MARK	COLUMN SIZE
C-1	HSS7X7X3/8

FOUNDATION PLAN

SCALE: 1/4"=1'-0"

1. T/FTG EL. VARIES -(1'-6") BELOW GRADE MIN.

▲ DENOTES SIMPSON STRONG TIE TENSION TIE MODEL NUMBER HIT4.

INDIVIDUAL SQUARE FOOTINGS

			MAT BARS EACH WAY		
MARK	SIZE	THICKNESS	QUANTITY	BAR SIZE	LENGTH
F-5.0	5'-0" X 5'-0"	24"	6	#5	4'-6"
F-6.0	6'-0" X 6'-0"	24"	7	#5	5'-6"

GENERAL MASONRY NOTES:

1. MASONRY CONSTRUCTION SHALL CONFORM TO THE REQUIREMENTS OF THE 'BUILDING CODE REQUIREMENTS FOR MASONRY STRUCTURES' (ACI 530-99/ASCE 5-99) AND THE 'SPECIFICATIONS FOR MASONRY STRUCTURES' (ACI 530.1-99/ASCE 6-99).
2. MATERIALS:
   A. WATER SHALL BE CLEAN AND FREE FROM INJURIOUS AMOUNTS OF OILS, ACIDS, ALKALIS, ORGANIC MATERIALS, OR OTHER DELETERIOUS SUBSTANCES.
   B. AGGREGATE FOR MORTAR SHALL CONFORM TO THE STANDARD SPECIFICATION FOR MASONRY MORTAR AGGREGATE (ASTM C144)
   C. MORTAR SHALL BE TYPE "S" AND CONFORM TO THE REQUIREMENTS OF ASTM STANDARD SPECIFICATIONS FOR UNIT MASONRY MORTAR (ASTM C270).
   E. CONCRETE MASONRY UNITS(CMU) SHALL BE NORMAL WEIGHT UNITS CONFORMING TO ASTM C90, TYPE I, TWO CELL. CONCRETE MASONRY NET AREA UNIT STRENGTH SHALL BE NO LESS THAN 1900 PSI IN ACCORDANCE WITH ASTM C140. DESIGN COMPRESSIVE STRENGTH OF MASONRY, F'M-1500 PSI. MATERIAL SUPPLIER TO SUBMIT ASTM C 1314 TEST REPORT VERIFYING COMPRESSIVE STRENGTH OF MASONRY
   F. ALL HORIZONTAL JOINT REINFORCING SHALL BE GALVANIZED, LADDER TYPE MASONRY REINFORCING WITH 9 GAGE WIRE AND SHALL CONFORM TO THE REQUIREMENTS OF ASTM STANDARD SPECIFICATIONS FOR COLD DRAWN STEEL WIRE FOR CONCRETE REINFORCEMENT (ASTM C82).
   G. REINFORCING STEEL SHALL BE HIGH STRENGTH DEFORMED BARS CONFORMING TO ASTM A615, GRADE 60.
3. MASONRY MATERIALS SHALL BE PROTECTED BY THE GENERAL CONTRACTOR AGAINST GROUNDWATER AND RAIN PRIOR TO AND DURING CONSTRUCTION OF THE WALLS.
4. MASONRY SHALL BE LAID IN RUNNING BOND PATTERN (U.N.O.), MORTAR SHALL BE TROWELLED ON FULL SHELL. TOP AND ENDS WITH UNIT SHOVED INTO PLACE AND ALIGNED. MORTAR JOINTS ON EACH SIDE TO BE STRUCK CLEAN WITH THE EXTERIOR JOINTS TOOLED WITH A CONCAVE JOINTER. AIR SPACE IS TO BE FREE OF MORTAR BETWEEN SHEATHING AND MASONRY.
5. THRU-WALL FLASHING SHALL BE 20 MIL P.V.C. CONFORMING TO A.S.T.M. D822 AND PROVIDED AT FLOOR LINE AND ABOVE ALL OPENINGS WITH WEEP HOLES AT 24" ON CENTER. WEEP HOLES TO BE MADE BY OMITTING MORTAR IN HEAD JOINTS.
6. VERTICAL CONTROL JOINTS IN 6" CONCRETE MASONRY CONSTRUCTION SHALL BE PLACED AT THE FOLLOWING LOCATIONS:
   - MAXIMUM SPACING OF 20'-0"
   - ALL ABRUPT CHANGES IN WALL HEIGHT
   - ALL CHANGES IN WALL THICKNESS, SUCH AS PIPE AND DUCT CHASES AND ADJACENT TO COLUMNS OR PILASTERS
   - CENTERED ABOVE JOINTS IN FOUNDATIONS AND FLOORS
   - CENTERED BELOW JOINTS IN ROOFS AND FLOORS THAT BEAR ON CMU WALLS
   - AT WALL INTERSECTIONS, CORNERS, OR CHANGES IN WALL DIRECTION
   - AT THE END OF LINTELS AND SILLS ON ONE SIDE OF WALL OPENINGS SIX FEET OR LESS IN WIDTH AND AT BOTH SIDES OF LINTELS AND SILLS WHERE WALL OPENINGS ARE MORE THAN SIX FEET WIDE, UNLESS BOND BEAMS OR EQUIVALENT JOINT REINFORCEMENT IS PLACED @ THE TOP AND BOTTOM OF OPENING.
   - AT EXPANSION JOINTS IN BRICK VENEER WHERE CMU IS USED AS BACKUP.

   JOINT IS TO BE FILLED WITH 3/8" NEOPRENE MATERIAL CONFORMING TO ASTM D1056 CLASS RE41 AND SEALED AT EXTERIOR USING CLOSED CELL POLYETHYLENE BACKER ROD (NMC GREEN-ROD OR EQUAL) AND POLYURETHANE SEALANT CONFORMING TO ASTM C 920 (SONNEBORN NP 1 OR EQUAL). COORDINATE W/ ARCHITECTURAL DRAWINGS.
7. VERTICAL EXPANSION JOINTS IN 4" CMU VENEER SHALL BE PLACED AT THE FOLLOWING LOCATIONS:
   - AT APPROX. 20'-0" INTERVALS IN EXTERIOR WALLS NOT INTERRUPTED BY OPENINGS.
   - AT OFFSETS, JUNCTIONS, AND CORNERS
   - AT WINDOW JAMBS, PUNCHED WINDOW OPENINGS, AND JAMBS OF COLUMN COVERS OR PIERS IN VENEER.
   - ABOVE JOINTS IN FOUNDATIONS AND FLOORS
   - BELOW JOINTS IN ROOFS AND FLOORS THAT BEAR ON THE WALL.

   JOINT IS TO BE FILLED WITH 3/8" NEOPRENE MATERIAL CONFORMING TO ASTM D1056 CLASS RE41 AND SEALED AT EXTERIOR USING CLOSED CELL POLYETHYLENE BACKER ROD (NMC GREEN-ROD OR EQUAL) AND POLYURETHANE SEALANT CONFORMING TO ASTM C 920 (SONNEBORN NP 1 OR EQUAL). COORDINATE LOCATION W/ ARCHITECTURAL DRAWINGS.
8. MASONRY VENEER (4" AND 6" SPLITFACED CMU) TO BE ATTACHED TO STUDS USING CORROSION RESISTANT 2 PIECE ADJUSTABLE METAL TIES, 3/16" DIAMETER MINIMUM, LOCATED 16" ON CENTER HORIZONTALLY AND 16" ON CENTER VERTICALLY. TIES TO SCREW TO STUDS. TIES TO EMBED INTO MASONRY 2" MINIMUM.
9. GROUT FOR REINFORCED MASONRY:
   A. GROUT TO COMPLY WITH ASTM C-476
   B. FINE GROUT PROPORTIONS:
      1 PART PORTLAND CEMENT
      0 TO 0.1 PART HYDRATED LIME
      2 1/4 TO 3 PART SAND
   C. SLUMP TO BE 8" FOR MASONRY UNITS WITH LOW ABSORPTION AND 10" FOR MASONRY UNITS WITH HIGH ABSORPTION.
   D. COMPRESSIVE STRENGTH OF GROUT AT 28 DAYS TO BE 2500 PSI.
10. ALL BOND BEAMS SHALL BE FILLED W/ GROUT AND REINFORCED AS INDICATED ON THE DRAWINGS. MORTAR FILL IS NOT PERMITTED.
11. VERTICAL REINFORCING SHALL BE CENTERED IN MASONRY (UNO) AND SHALL BE HELD IN POSITION TOP AND BOTTOM AND AT INTERVALS NOT EXCEEDING 4'-0" OC.
13. BARS EMBEDDED INTO GROUT ARE TO HAVE A MINIMUM EMBEDMENT LENGTH OF 36 X BAR DIAMETER.
14. MINIMUM LENGTH OF LAP SPLICE FOR BARS IN GROUT IS 48 X BAR DIAMETER.
15. REINFORCING SHALL BE SECURELY TIED INTO PROPER LOCATION WITHIN CELL PRIOR TO FILLING WITH GROUT.
16. GROUT SHALL BE FILLED INTO REQUIRED CELLS IN LIFTS NOT EXCEEDING 4'-0".
17. GROUT FILL ALL CELLS BELOW GRADE.
18. GROUT SHALL BE CONSOLIDATED AT PLACEMENT AND AGAIN AFTER INITIAL WATER LOSS AND SETTLEMENT HAS OCCURRED
19. GROUTING SHALL BE STOPPED 1-1/2" BELOW THE TOP OF A COURSE TO FORM A KEY JOINT.
20. GROUTING OF MASONRY BOND BEAM OR LINTELS SHALL BE DONE IN ONE CONTINUOUS OPERATION.
21. TYPICAL 6" CMU SPLITFACE VERTICAL WALL REINFORCING TO BE #5 @ 48" O.C. AND HORIZONTAL REINFORCING SHALL BE 9 GAGE JOINT REINFORCEMENT AT 16" O.C. UNLESS MORE STRINGENT REINFORCING IS SHOWN OTHERWISE ON DRAWINGS.

ESD
architecture • interior design
1300 South Mint Street, Suite 300, Charlotte, NC 28203
Email: esd@esdarch.com • Fax: 704-373-0902 • Phone: 704-373-1900

SRS
SOLID ROCK STRUCTURAL PLLC
SCOTT WESTMORELAND, P.E.
71 GLENN HILL LANE HIDDENITE, N.C. 28636
PHONE: 704-819-6415
FAX: 704-585-6529
SCOTT@SOLIDROCKSTRUCTURAL.COM
FIRM LICENSE NO. P-0390

NORTH CAROLINA PROFESSIONAL SEAL 027444 ENGINEER SCOTT WESTMORELAND

Signed by: Scott Westmoreland
Date & Time: Oct 6 2014 11:51 AM

SOUTHEASTERN EMS
NEW SOUTHEASTERN EMS FOR RUTHERFORD COUNTY

ISSUE DATE: 9-29-14
REVISION 1: --
REVISION 2: --
REVISION 3: --
REVISION 4: --

PROJECT #:
CONTENT:

FOUNDATION PLAN

DRAWN BY: SMW

CADD FILE NAME: 14-70-S1.0

THIS DRAWING AND THE DESIGN SHOWN ARE THE PROPERTY OF ESD. THE REPRODUCTION, OR USE OF THIS DRAWING WITHOUT THEIR WRITTEN CONSENT IS PROHIBITED. ANY INFRINGEMENT IS SUBJECT TO LEGAL ACTION.

Sheet
S1.0

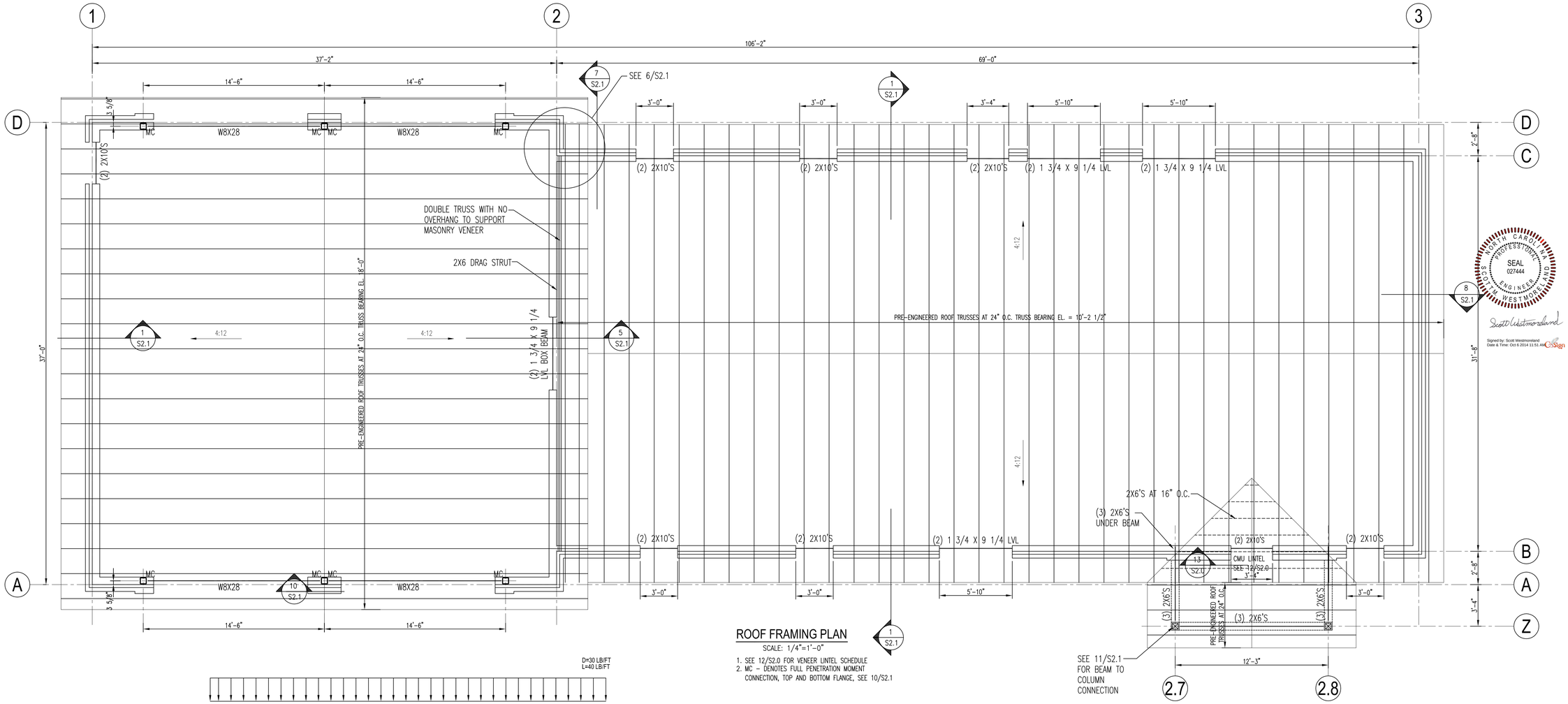

ROOF FRAMING PLAN

SCALE: 1/4"=1'-0"

1 S2.1

1. SEE 12/S2.0 FOR VENEER LINTEL SCHEDULE
2. MC – DENOTES FULL PENETRATION MOMENT CONNECTION, TOP AND BOTTOM FLANGE, SEE 10/S2.1

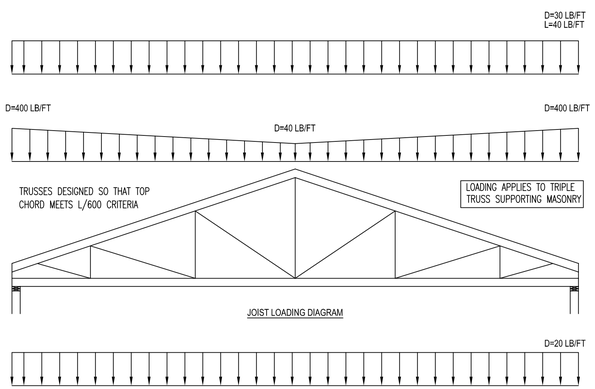

DESIGN LOADS		
DEAD LOAD	(TOP CHORD)	15 PSF
DEAD LOAD	(BOTTOM CHORD)	10 PSF
LIVE LOAD		20 PSF
WIND LOAD	(NET UPLIFT)	-10 PSF

ESD
architecture • interior design
1300 South Mint Street, Suite 300, Charlotte, NC 28203
Email: esd@esdarch.com • Fax: 704-373-0902 • Phone: 704-373-1900

SRS
SOLID ROCK STRUCTURAL PLLC
SCOTT WESTMORELAND, P.E.
71 GLENN HILL LANE HIDDENITE, N.C. 28636
PHONE: 704-819-6415
FAX: 704-585-6529
SCOT@SOLIDROCKSTRUCTURAL.COM
FIRM LICENSE NO. P-0390

NORTH CAROLINA PROFESSIONAL ENGINEER SEAL 027444 SCOTT WESTMORELAND

Signed by: Scott Westmoreland
Date & Time: Oct 6 2014 11:51 AM

SOUTHEASTERN EMS
NEW SOUTHEASTERN EMS FOR RUTHERFORD COUNTY

ISSUE DATE: 9-29-14
REVISION 1: --
REVISION 2: --
REVISION 3: --
REVISION 4: --
PROJECT #:
CONTENT:

ROOF FRAMING PLAN

DRAWN BY: SMW
CADD FILE NAME: 14-70-S1.1

THIS DRAWING AND THE DESIGN SHOWN ARE THE PROPERTY OF ESD. THE REPRODUCTION, OR USE OF THIS DRAWING WITHOUT THEIR WRITTEN CONSENT IS PROHIBITED, ANY INFRINGEMENT IS SUBJECT TO LEGAL ACTION.

Sheet
S1.1

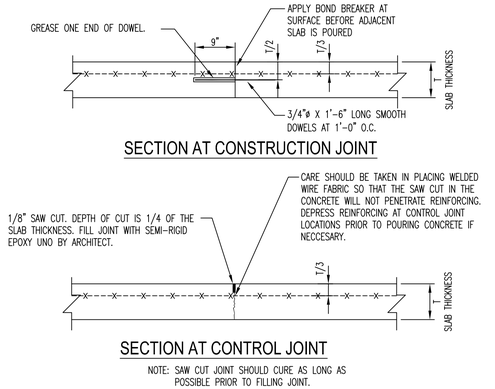

1 SLAB CONSTRUCTION / CONTROL JOINT N.T.S.

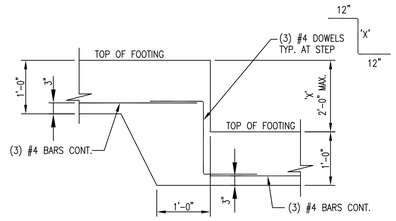

2 FOOTING STEP DETAIL 3/4" = 1'-0"

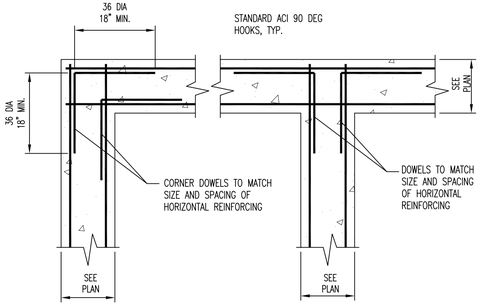

3 SECTION AT FOOTING INTERSECTIONS 3/4" = 1'-0"

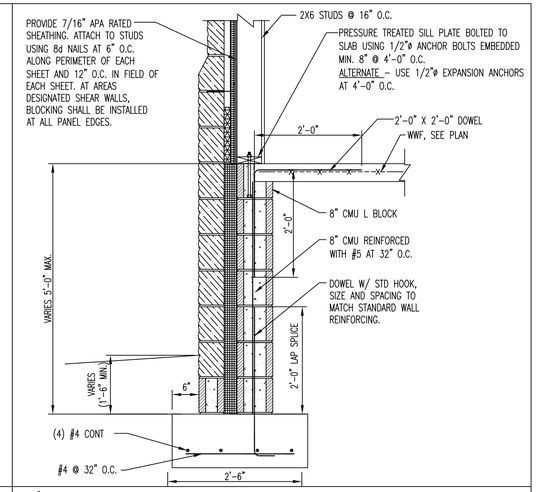

4 TYPICAL WALL SECTION 3/4" = 1'-0"

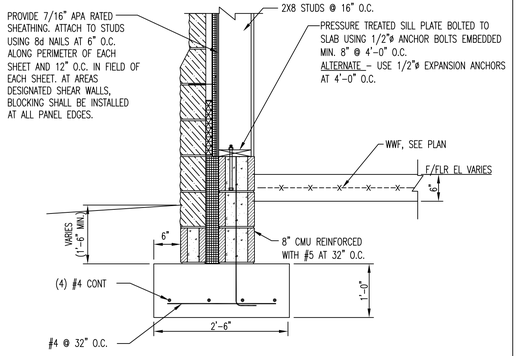

5 TYPICAL SECTION AT TRUCK BAYS 3/4" = 1'-0"

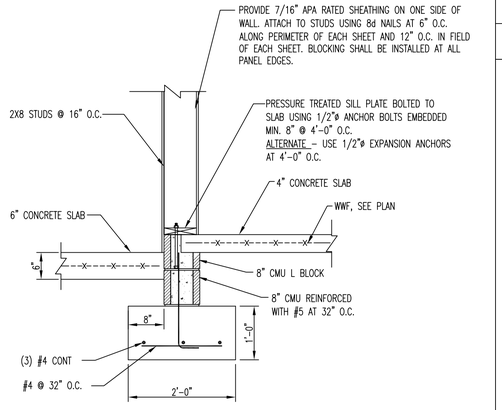

6 SECTION 3/4" = 1'-0"

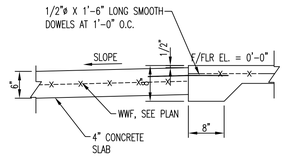

7 SECTION 3/4" = 1'-0"

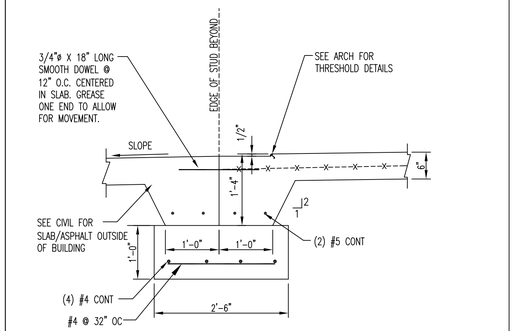

8 FOOTING SECTION AT TRUCK DOORS 3/4" = 1'-0"

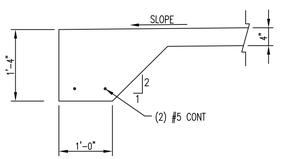

9 TURNDOWN SLAB 3/4" = 1'-0"

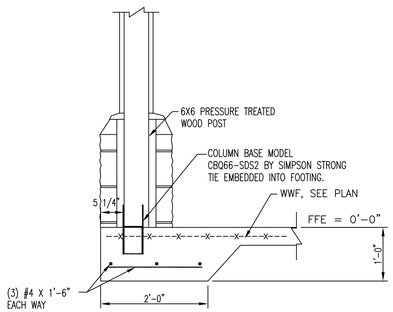

10 THICKENED SLAB DETAIL 3/4" = 1'-0"

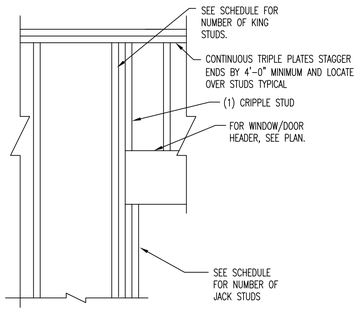

HEADER OR BEAM	NUMBER OF KING STUDS	NUMBER OF JACK STUDS
(2) 2X10	2	2
(2) 1 3/4 X 9 1/4 LVL	2	3

11 EXTERIOR HEADER DETAIL N.T.S.

VENEER STEEL LINTEL SCHEDULE

CLEAR OPENING	ONE ANGLE FOR 4" WYTHE	MIN BRG	TYPICAL DETAILS
0'-8" TO 3'-4"	L3 1/2X3 1/2X1/4	8"	NOM 4" WYTHE
3'-4" TO 5'-4"	L4X3 1/2X1/4 LLV	8"	
5'-4" TO 7'-4"	L5X3 1/2X5/16 LLV	12"	

CMU LINTEL SCHEDULE

CLEAR OPENING	DEPTH	REINFORCING 6" CMU	TYPICAL DETAILS
0'-8" TO 3'-4"	8"	1-#4	GROUT, 1" CLR, 8" NOM, 4" NOM WIDTH, 8" NOM DEPTH

NOTES:
1. ALL SPANS TO HAVE MINIMUM 8" BEARING EACH END.
2. SEE STEEL BEAM SCHEDULE FOR LINTELS WITH CLEAR SPANS OVER 12'-0" AND LINTELS SUPPORTING ROOF OR FLOOR LOADS.

12 MASONRY LINTEL DETAIL N.T.S.

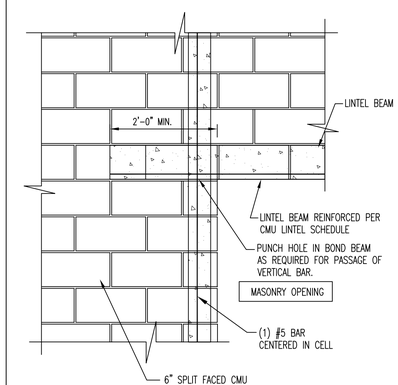

13 LINTEL BEAM BEARING N.T.S.

ESD
architecture • interior design
1300 South Mint Street, Suite 300, Charlotte, NC 28203
Email: esd@esdarch.com • Fax: 704-373-0902 • Phone: 704-373-1900

SRS
SOLID ROCK STRUCTURAL PLLC
SCOTT WESTMORELAND, P.E.
71 GLENN HILL LANE HIDDENITE, N.C. 28636
PHONE: 704-819-6415
FAX: 704-585-6529
SCOTT@SOLIDROCKSTRUCTURAL.COM
FIRM LICENSE NO. P-0390

NORTH CAROLINA PROFESSIONAL ENGINEER SEAL 027444 SCOTT WESTMORELAND

Scott Westmoreland
Signed by: Scott Westmoreland
Date & Time: Oct 6 2014 11:51 AM

SOUTHEASTERN EMS
NEW SOUTHEASTERN EMS
FOR
RUTHERFORD COUNTY

ISSUE DATE: 9-29-14
REVISION 1: --
REVISION 2: --
REVISION 3: --
REVISION 4: --
PROJECT #:
CONTENT:
DETAILS SHEET 1
DRAWN BY: SMW
CADD FILE NAME: 14-70-S2.0

THIS DRAWING AND THE DESIGN SHOWN ARE THE PROPERTY OF ESD. THE REPRODUCTION, OR USE OF THIS DRAWING WITHOUT THEIR WRITTEN CONSENT IS PROHIBITED. ANY INFRINGEMENT IS SUBJECT TO LEGAL ACTION.

Sheet
S2.0

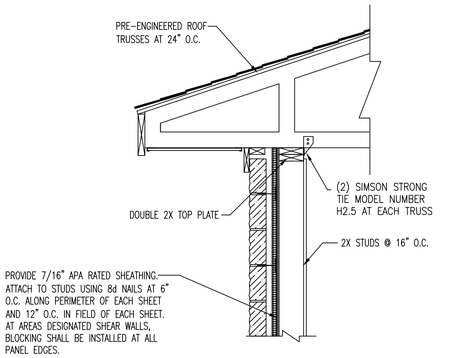

1 SECTION 3/4" = 1'-0"

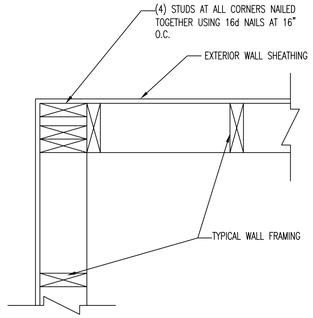

2 TYP. CORNER STUD LAYOUT 3/4" = 1'-0"

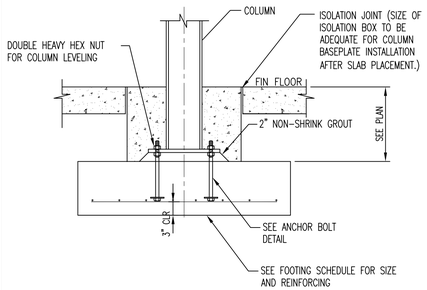

3 COLUMN FOOTING SECTION N.T.S.

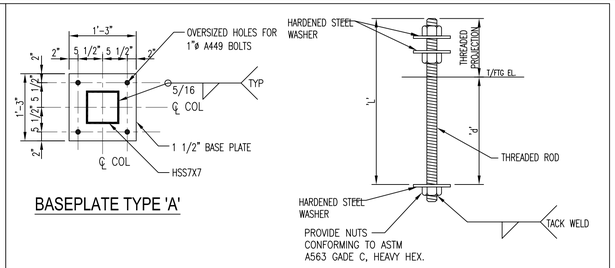

ANCHOR BOLT				
MATERIAL	SIZE	'L'	'd'	PROJ.
A449	1"ø	23"	17"	6"

4 BASEPLATE AND ANCHORBOLT DETAILS 3/4" = 1'-0"

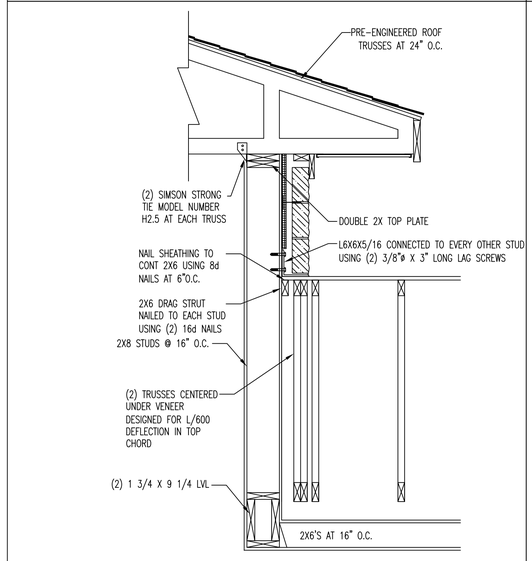

5 SECTION 3/4" = 1'-0"

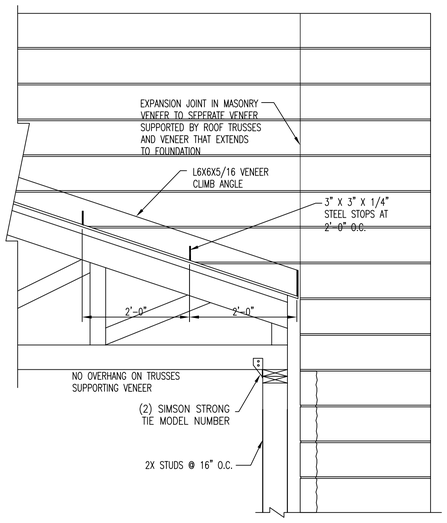

7 SECTION 3/4" = 1'-0"

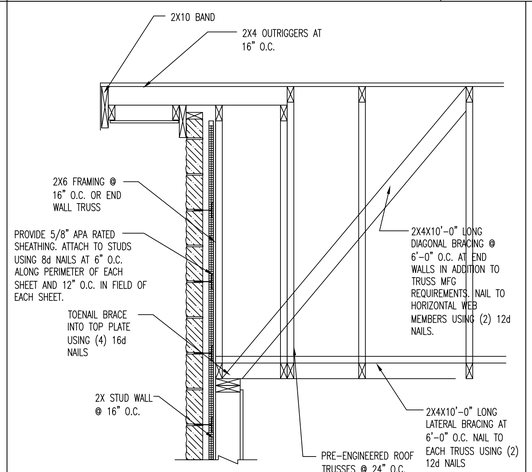

8 SECTION 3/4" = 1'-0"

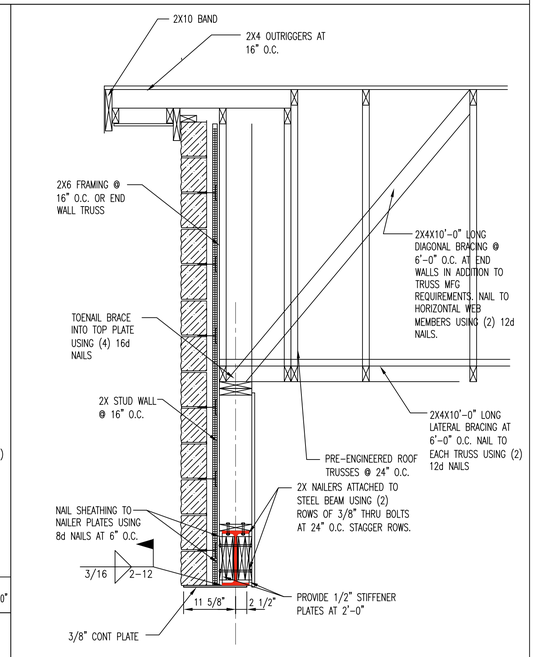

9 SECTION 3/4" = 1'-0"

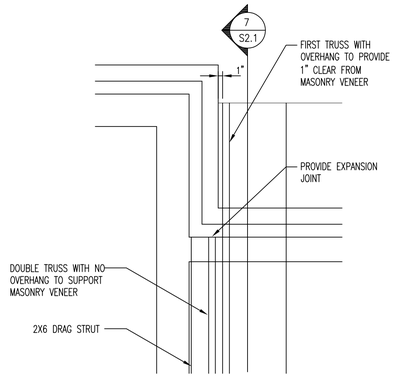

6 DETAIL 3/4" = 1'-0"

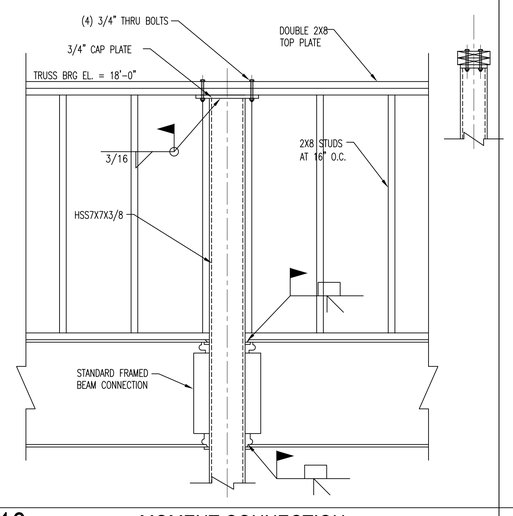

10 MOMENT CONNECTION 3/4" = 1'-0"

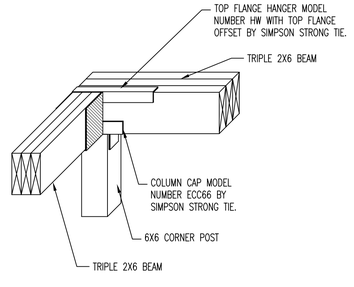

11 CORNER WOOD POST CONN. 3/4" = 1'-0"

ESD
architecture • interior design
1300 South Mint Street, Suite 300, Charlotte, NC 28203
Email: esd@esdarch.com • Fax: 704-373-0902 • Phone: 704-373-1900

SRS
SOLID ROCK STRUCTURAL PLLC
SCOTT WESTMORELAND, P.E.
71 GLENN HILL LANE HIDDENITE, N.C. 28636
PHONE: 704-819-6415
FAX: 704-585-6529
SCOTT@SOLIDROCKSTRUCTURAL.COM
FIRM LICENSE NO. P-0390

NORTH CAROLINA PROFESSIONAL ENGINEER SEAL 027444 SCOTT WESTMORELAND

Scott Westmoreland

Signed by: Scott Westmoreland
Date & Time: Oct 6 2014 11:52 AM EDT

SOUTHEASTERN EMS
NEW SOUTHEASTERN EMS
FOR
RUTHERFORD COUNTY

ISSUE DATE: 9-29-14
REVISION 1: --
REVISION 2: --
REVISION 3: --
REVISION 4: --
PROJECT #:
CONTENT:

DETAILS SHEET 2

DRAWN BY: SMW
CADD FILE NAME: 14-70-S2.1

THIS DRAWING AND THE DESIGN SHOWN ARE THE PROPERTY OF ESD. THE REPRODUCTION, OR USE OF THIS DRAWING WITHOUT THEIR WRITTEN CONSENT IS PROHIBITED. ANY INFRINGEMENT IS SUBJECT TO LEGAL ACTION.

Sheet
S2.1